Preprints, 16th IFAC Workshop on Time Delay Systems
September 29 - October 1, 2021. Guangzhou, China

Stabilization with Zero Location Constraints for Delay-Based Non-collocated Vibration Suppression ⋆

Haik Silm * **Wim Michiels** * **Tomáš Vyhlídal** **

* *Departement of Computer Science, KU Leuven, Celestijnenlaan 200A, 3001 Leuven, Belgium ({haik.silm,wim.michiels}@cs.kuleuven.be)*
** *Dept. Instrumentation and Control Engineering, Faculty of Mechanical Engineering and Czech Institute of Informatics, Robotics and Cybernetics, Czech Technical University in Prague, Prague 6, Czechia (tomas.vyhlidal@fs.cvut.cz)*

Abstract: A generally applicable design of non-collocated vibration absorption by a delayed resonator is proposed. It is grounded in the direct assignment of imaginary axis zeros of the transfer function between the periodic disturbance force and the target. We show that these transmission zeros are characterized as eigenvalues of a delay differential-algebraic system. Furthermore, a stabilizing local controller is added to the setup in order to widen the range of admissible vibration frequencies. These design requirements are translated into an optimization problem of the spectral abscissa function subjected to zero location constraints. The presented approach and algorithm are validated by a simulation on a three body lumped mass-spring system.

Keywords: Vibration control, Delayed resonator, Transmission zeros, Stability, Spectral method

1. INTRODUCTION

Vibration suppression is a crucial task in many engineering applications. Let us for example mention machining tools, high-precision meteorology, electron microscopes, deep space telescopes, etc. Both passive and active approaches are widely used for vibration suppression (Preumont, 2018). One of the most efficient methods for entire absorption is known as the delayed resonator (DR) (Olgac and Holm-Hansen, 1994; Olgac, 1995). Applying an active time-delayed feedback, parameters of the passive absorber are virtually modified so that the vibrations of the platform are suppressed entirely. Note the many modifications of the resonator concept, including a relative position feedback absorber (Olgac and Hosek, 1997), a torsional vibration absorber (Hosek et al., 1997), multiple delayed resonators (Jalili and Olgac, 1999) and an autotuning algorithm to enhance the robustness against uncertainties (Hosek and Olgac, 2002, see also wide references therein).

Recently, a complete dynamics analysis of a DR was performed in Vyhlídal et al. (2014) and consequently in Pilbauer et al. (2016) applying a distributed delay which poses a filtration effect. Both the presented works report relatively narrow operable frequency ranges, with the limits resulting from stability and implementation constraints. In Kučera et al. (2017, see also Eris et al., 2018) the extended delayed resonator was proposed to mitigate this inefficiency. Let us also point to Vyhlídal et al. (2019), where the stability analysis is conducted by the DR's force and energy demands. A robust DR concept was proposed in Pilbauer et al. (2019) and Kuře et al. (2018, see also Fenzi et al., 2017). A DR targeting multiple frequencies was proposed in Valášek et al. (2019) and in Šika et al. (2021) the DR concept was extended from 1D to 2D vibration absorption.

It has to be stressed that above literature addresses the standard collocated vibration absorption task where the absorber is directly attached to the suppression target. In this case it suffices to tune the absorber to have its resonance frequency corresponding to the vibration. For many systems, however, these vibration-affected parts of the structure are also the most inaccessible ones for a variety of reasons. For example, we cannot place an active vibration absorber at the tip of the cutting tool in machining or at the end-point of the micro-manipulator of a surgery robot. In these cases, the vibration suppression need to be performed by an absorber that is remotely located from the point of suppression, which makes them non-collocated. As recently identified in Jenkins and Olgac (2019), Olgac and Jenkins (2021) and Olgac and Jenkins (2020), the design complexity of the arising problem of non-collocated vibration absorption increases dramatically. Next to the active absorber, a whole resonant substructure including a part of the underlying structure has to be involved in vibration absorption. The problem formulation and analysis is accompanied in Olgac and Jenkins (2021) by a design approach based on assigning imaginary axis eigenvalues

⋆ This work was supported by the project CELSA/20/13 of the KU Leuven Research Council, the project G092721N of the Research Foundation-Flanders (FWO - Vlaanderen) and by the project 21-00871S of the Czech Science Foundation.

© 2021 the authors. Accepted by IFAC for publication under a Creative Commons License CC-BY-NC-ND

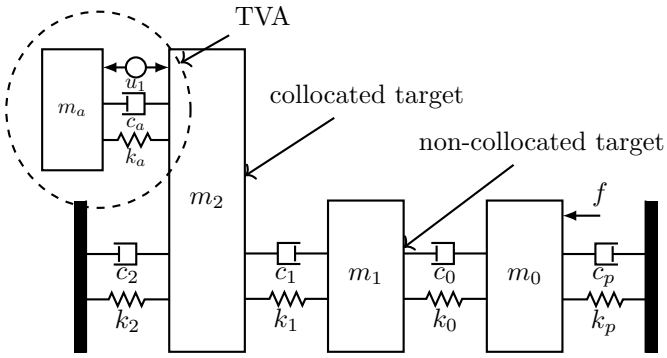

Fig. 1. Three body mass-spring-damper system excited by an external vibration force f. An active vibration absorber (TVA) can be tuned to suppress the vibration at either the collocated or the non-collocated target.

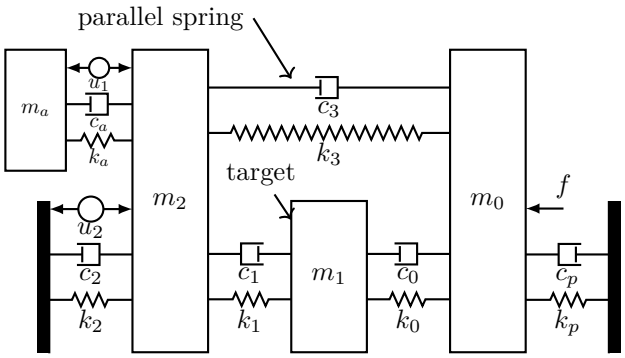

Fig. 2. The spring link between m_2 and m_0 renders existing approaches of non-collocated vibration suppression for the target m_1 infeasible, since no substructure can take the role of the absorber. An additional local controller u_2 is used to stabilize the overall system.

of an identified resonant substructure. However, as it will be discussed further, such a substructure does not always exist. This motivates us to present a novel, generally applicable design approach, grounded in directly assigning imaginary axis zeros of the transfer function between the disturbance force and the target.

The structure of the paper is as follows. In Section 2, we highlight the differences between collocated and non-collated absorption suppression and explain why identifying a resonant substructure is not always possible. This will motivate a new design procedure for vibration control based on zero location constraints, which we describe in Section 3. In Section 4 we apply the procedure on an example and show a simulation result. Section 5 contains concluding remarks.

2. MOTIVATION

The general idea of suppressing vibrations using an absorber in the collocated case is to directly attach a mass m_a with a spring of stiffness k_a and damping c_a to the target of suppression, as it is the case in Fig. 1 for a one dimensional lumped mass-spring-damper system with target mass m_2. This passive absorber setup is further complemented by a sensor-actuator pair between the target and the absorber body to create an actively tuned vibration absorber (TVA). The controller of the local feedback loop u_1 is tuned so that it compensates the damping of the attached mass and unifies the resonance frequency of the TVA with the frequency to be suppressed. It is well known that such an ideal resonator will completely absorb the vibration of the body it is attached to. It is done via oscillating with the exact amplitude and phase required to counter act the vibration forces at the target and thus leaving the body with mass m_2 in Fig. 1 motionless for the said excitation frequency.

This phenomena, often called anti-resonance, can also be exploited to suppress the vibration of a body other than the one to which the absorber is directly attached to. As a specific example, this would be the case if the suppression target is the body with mass m_1 in Fig. 1. To give an idea how it would work, we ignore the damping for a moment and fix the position of the target body like it would be a wall, which separates the setup into two parts: One on the right, where the vibration force acts (the only body it includes here is the one with mass m_0), and one on the left, which is independent of it (the bodies of mass m_a and m_2 together with the respective springs). If the latter part has now a resonant mode exactly at the frequency of the vibration, it is able to freely oscillate and sustain the counterforce on the target which is necessary to balance the vibration forces exerted by the former part. The mechanism is therefore the same as in the collocated case, but instead of having a single mass in resonance, a multibody resonant substructure takes the role of an absorber.

The task of the local feedback u_1 is then to ensure that the absorber has an undamped mode at the desired frequency. Compared to the collocated case, however, the tuning of the controller is more challenging since it depends not only on the parameters of the attached mass but also in part on the original structure (Olgac and Jenkins, 2021). In both cases the objective of the control is achieved by shaping the spectrum of the absorber (the collocated case) or the whole resonant substructure (the non-collocated case) such that it has a pair of eigenvalues on the imaginary axis corresponding to a resonant mode at the desired suppression frequency.

We turn now to Fig. 2, where an additional spring (and damper) is attached between the bodies with mass m_0 and m_2, but the suppression target stays the same. Fixing the target body does not divide the structure into two parts, where along one the vibration is propagated towards the target and one that can act as an absorber. The reason is that there is not only a single path from the force through the target to what was before the absorber substructure, but a parallel path bypassing the target. The mechanism to achieve suppression of the vibration at the target cannot be therefore based on a counterforce exerted by a segregated substructure, but instead necessitates an equilibrium of forces at the target body involving all of the other bodies.

Consequently, we have to rethink the tuning of the controller. Since a resonant substructure cannot be identified we have to forgo placing the eigenvalues but look directly at the transfer function from the vibration force to the displacement of the target body. Complete suppression of the vibration in fact corresponds to a pair of transmis-

sion zeros on the imaginary axis at the desired frequency. Therefore, we introduce in this work a controller design based on placing the transfer function's zeros which is a general approach and applicable to both collocated and non-collocated vibration suppression, with and without parallel springs.

A major point of concern for the application of active tuned vibration absorbers is the stability of the overall system. In the collocated case this is evident, because for an ideal resonator, energy must be induced to overcome the losses from the damping and as a result the system is not passive anymore. Moreover, the absorber is actually tuned to be marginally stable, so the rest of the structure has to act as a stabilizing feedback. This puts a limit to the admissible vibration frequencies, depending on the structures ability to stabilize a particular configuration of the control loop (Vyhlídal et al., 2019). To address this, a second feedback loop can be added to the system to be in charge of improving the dynamic response of the system so that a wider range of vibration frequencies as well as targets can be suppressed (Fenzi et al., 2017; Kuře et al., 2018). This is done in the example of Fig. 2 by a controller between the body with mass m_2 and the supporting wall. Note that there is an interdependence in the tuning of the controller u_1 to position the zeros and u_2, the stabilizing controller. It leads to a co-design problem, where the task of vibration suppression has to be done simultaneously with finding a stabilizing control law, both which are addressed in the next section.

3. CONTROLLER DESIGN

As starting point for the problem of non-collocated vibration suppression we take the state-space representation of the underlying lumped mass-spring-damper system

$$\begin{aligned} \dot{x}(t) &= Ax(t) + Bf(t) + B_1u_1(t) + B_2u_2(t) \\ y(t) &= Cx(t) \\ y_1(t) &= C_1x(t) \\ y_2(t) &= C_2x(t). \end{aligned} \tag{1}$$

The input $f(t) = F\cos(\omega t)$ is the external vibration force with amplitude F and frequency ω. The output $y(t) \in \mathbb{R}$ is the displacement of the target body. The additional input-output pairs (u_1, y_1) and (u_2, y_2) are the two local feedback loops formed by sensor and actuator pairs. Each of the loops will house a controller among which the following two goals will be divided: The first controller is tuned so that the periodic vibration at the target body for the given frequency $\omega > 0$ is completely suppressed after some transient response, i.e., $\lim_{t\to\infty} y(t) = 0$. In the application addressed in the next section, it corresponds to the active control of the delayed resonator. The second controller is used to ensure that the overall system remains stable.

The control algorithms within the DR loop can take various forms, ranging from delayed position (Olgac and Holm-Hansen, 1994), velocity (Filipović and Olgac, 2002) or acceleration (Olgac et al., 1997; Vyhlídal et al., 2014) feedback. The feedback can also be taken from these quantities passing through a distributed delay (Pilbauer et al., 2016; Pilbauer et al., 2019). Let us also point to a delay free resonator feedback in Rivaz and Rohling (2007). The peculiar application of a delay has a clear motivation in the collocated case in compensating for the phase shift induced by the damping. Here the delayed relative position of the absorber body is considered as feedback for the vibration suppression.

For the stabilizing controller we will use in this work static feedback of the displacement and velocity of another body. The closing of the feedback loop is therefore expressed with

$$\begin{aligned} u_1(t) &= gy_1(t-\tau) \\ u_2(t) &= Ky_2(t) \end{aligned} \tag{2}$$

where the tuning parameters are the gain $g \in \mathbb{R}$ and delay $\tau \geq 0$ for the first (absorber) controller and feedback-matrix $K \in \mathbb{R}^{1\times 2}$ for the second (stabilizing) controller. Due to the introduction of a delay, the system (1) and (2) will be infinite dimensional.

3.1 Assigning of transmission zeros

As discussed in the previous section the fundamental role in suppressing vibrations are played by the transmission zeros. If a transmission zero is located on the imaginary axis, then at steady state the corresponding frequency will vanish from the output. Transmission zeros can be obtained as the zeros of the transfer function, but instead we will compute them from the state space representation (1) and (2) of the closed-loop system.

Assuming that the system is exponentially stable, any $\lambda \in \mathbb{C}$ for which $f(t) = \underline{F}\,\mathrm{e}^{\lambda t}, \underline{F} \neq 0$ leads to a stationary solution characterized by $y(t) = 0$ is a transmission zero. Inserting $x(t) = \underline{x}\,\mathrm{e}^{\lambda t}$ into (1) and (2) gives

$$\begin{bmatrix} \lambda I - A - gB_1C_1\,\mathrm{e}^{-\lambda\tau} - B_2KC_2 & -B \\ -C & 0 \end{bmatrix} \begin{bmatrix} \underline{x} \\ \underline{F} \end{bmatrix} = 0. \tag{3}$$

The existence of a non-zero solution for $\begin{bmatrix}\underline{x}^{\mathrm{T}} & \underline{F}^{\mathrm{T}}\end{bmatrix}^{\mathrm{T}}$ is equivalent to

$$\det\left(\lambda \begin{bmatrix} I & 0 \\ 0 & 0 \end{bmatrix} - \begin{bmatrix} A + B_2KC_2 & B \\ C & 0 \end{bmatrix} - \begin{bmatrix} gB_1C_1 & 0 \\ 0 & 0 \end{bmatrix} \mathrm{e}^{-\lambda\tau}\right) = 0, \tag{4}$$

which can be interpreted as a generalized nonlinear eigenvalue problem associated with a delay differential-algebraic equation (DDAE) system. The solutions of the eigenvalue problem, the so-called invariant zeros, can therefore be computed with the same methods as, e.g., for characteristic roots of neutral time-delay systems. If such a solution λ is not a characteristic root for $f(t) \equiv 0$, then a corresponding nonzero solution of (3) satisfies $\underline{F} \neq 0$, implying that λ is also a transmission zero.

The relation to eigenvalues inspires now a method to assign invariant zeros to $\lambda = \pm\mathrm{j}\omega$, which are transmission zeros by the exponential stability of the system, and, in this way, to find suitable controller parameters for suppressing vibrations. Following Michiels et al. (2010, Section 2), we apply the matrix determinant lemma to turn (4) with $\lambda = \mathrm{j}\omega$ into

$$1 - g\,\mathrm{e}^{-\mathrm{j}\omega\tau}\,z = 0 \tag{5}$$

with the complex number

$$z = [C_1\ 0] \begin{bmatrix} \mathrm{j}\omega I - A - B_2KC_2 & -B \\ -C & 0 \end{bmatrix}^{-1} \begin{bmatrix} B_1 \\ 0 \end{bmatrix}.$$

Note that in order to have a solution, the condition $z \neq 0$ has to be guaranteed by making suitable choices

for C_1 and B_1. In practise, the solvability requirement determines possible locations of the feedback loop from which imposing zeros at $\pm \mathrm{j}\omega$ is feasible.

With the help of (5) we can determine the gain g and delay τ of the first controller by taking the angle and modulus

$$g = \operatorname{sgn}(\operatorname{Im}(z))\frac{1}{|z|}$$
$$\tau = \begin{cases} \frac{\arg(z)}{\omega} & \text{if } \operatorname{Im}(z) \geq 0 \\ \frac{\arg(z)+\pi}{\omega} & \text{if } \operatorname{Im}(z) < 0 \end{cases}, \tag{6}$$

where $\arg(\cdot)$ maps to $(-\pi, \pi]$. In distinguishing the cases we take into account that it is physically impossible that the delay is negative while at the same time a smaller delay has most likely a better impact on overall stability of the system. This motivates us to select the smallest non-negative solution for the delay.

3.2 Stabilization with direct optimization

Shifting a zero in the complex plane requires two degrees of freedom, which are provided by closing the loop with the first controller using delayed position feedback. However, with the gain and delay obtained from (6), we are not only positing a zero to the desired frequency but also changing the overall dynamics of the system with the possibility of destabilizing it. A second control loop with a local static feedback is therefore introduced, providing additional degrees of freedom to mitigate the effects of the first control. Given that the additional controller is finite dimensional but closing the loop with a delay induces an infinite spectrum, we cannot control all of the eigenvalues but have to settle with influencing the right-most ones. This inevitably leads to an optimization problem with respect to the entries of the feedback matrix K to minimize the spectral abscissa function

$$\min_{K\in\mathbb{R}^2} \alpha(K) \coloneqq \sup\left(\operatorname{Re}(\lambda) : \det(M(\lambda, K)) = 0\right). \tag{7}$$

with the characteristic matrix of system (1) and (2)

$$M(\lambda, K) = \lambda I - A - g(K)\,\mathrm{e}^{-\lambda\tau(K)}\,B_1C_1 - B_2KC_2,$$

where we stress in the notation that the solutions of (6) depend on K.

Since the cost function in (7) is non-convex and non-Lipschitz continuous but almost everywhere smooth, we solve it with HANSO (Overton, 2021). It requires the evaluation of the cost function as well as its derivative if it exists. Generally, the derivative of a simple eigenvalue with respect to a parameter p is

$$\frac{\mathrm{d}\lambda}{\mathrm{d}p} = -\frac{w^*\frac{\partial M}{\partial p}v}{w^*\frac{\partial M}{\partial \lambda}v},$$

where w and v are the left and right eigenvector of the characteristic matrix M, respectively. The solution (6) is then incorporated using the chain rule.

Note that distinguishing the two cases in (6) leads to a discontinuity in the cost function along the curve where $\operatorname{Im}(z(K)) = 0$. Such a jump in the cost function might negatively affect the convergence properties for values of the delay close to $\tau = 0$ or $\tau = \frac{2\pi}{\omega}$. We can circumvent this issue by solving a constrained optimization problem (using a barrier function) for each case separately and picking then the solution which leads to the smaller spectral abscissa.

Table 1. Parameter values

Mass in kg		Stiffness in Nm^{-1}		Damping in Nsm^{-1}	
m_a	0.5	k_a	400	c_a	1.9
m_0	1	k_0	410	c_0	2.1
m_1	0.5	k_1	1450	c_1	4.9
m_2	1.15	k_2	380	c_2	2.2
		k_3	405	c_3	2
		k_p	1500	c_p	5

4. EXAMPLE

For the case study, we consider the example in Fig. 2. It is a minimal example with three bodies to reveal the new mechanism of general equilibrium of forces without resonant substructure. An additional mass is attached to the structure following the overall paradigm of tuned vibration absorbers, although, strictly speaking, it is not necessary since an equilibrium can in theory occur within the three bodies only. Here it is used to adjust the dynamics in the uncontrolled case in order to bring a transmission zero closer to the desired suppression frequency and it also serves as acting point for the first controller.

For the state

$$x = [x_0\ \dot{x}_0\ x_1\ \dot{x}_1\ x_2\ \dot{x}_2\ x_a\ \dot{x}_a]^{\mathrm{T}}$$

composed by the displacements and velocities of the bodies, the state matrix A is given at the top of the next page. The system input and output matrices are

$$B = \left[0\ \tfrac{1}{m_0}\ 0\ 0\ 0\ 0\ 0\ 0\right]^{\mathrm{T}}$$
$$C = [0\ 0\ 1\ 0\ 0\ 0\ 0\ 0],$$

corresponding to an external excitation at the body with mass m_0 and the one with mass m_1 as the target of suppression. The input and output matrices of the first feedback loop are

$$B_1 = \left[0\ 0\ 0\ 0\ 0\ -\tfrac{1}{m_2}\ 0\ \tfrac{1}{m_a}\right]^{T}$$
$$C_1 = [0\ 0\ 0\ 0\ -1\ 0\ 1\ 0],$$

corresponding to a force and the relative displacement, respectively, between the bodies with mass m_a and m_2. The second feedback loop's input and output matrices are

$$B_2 = \left[0\ 0\ 0\ 0\ 0\ \tfrac{1}{m_2}\ 0\ 0\right]^{T}$$
$$C_2 = \begin{bmatrix} 0\ 0\ 0\ 0\ 1\ 0\ 0\ 0 \\ 0\ 0\ 0\ 0\ 0\ 1\ 0\ 0 \end{bmatrix},$$

which correspond to a force between the wall and the body with mass m_2 and its displacement and velocity.

The values for the mechanical parameters of the setup are given in Table 1. In the uncontrolled case, they result in a pair of zeros at approximately $-7.1\pm\mathrm{j}59.9$ and $-1.6\pm\mathrm{j}26.4$ as well a real one at -195. Without the damping there would be two imaginary pairs of zeros at approximately ± 26.5 and ± 60.3. We suppose now that the frequency of the vibration we want to suppress is $\omega = 19\mathrm{s}^{-1}$ (i.e. far from the zeros of the uncontrolled system so that a stabilizing controller is likely required).

For illustration, we first select $K = 0$ (i.e. a stabilizing controller is not employed) and choose for the first controller a gain $g \approx -212.22\mathrm{Nm}^{-1}$ and a delay $\tau \approx 0.1561\mathrm{s}$

$$A = \begin{bmatrix} 0 & 1 & 0 & 0 & 0 & 0 & 0 & 0 \\ -\frac{k_0+k_3+k_p}{m_0} & -\frac{c_0+c_3+c_p}{m_0} & \frac{k_0}{m_0} & \frac{c_0}{m_0} & \frac{k_3}{m_0} & \frac{c_3}{m_0} & 0 & 0 \\ 0 & 0 & 0 & 1 & 0 & 0 & 0 & 0 \\ \frac{k_0}{m_1} & \frac{c_0}{m_1} & -\frac{k_0+k_1}{m_1} & -\frac{c_0+c_1}{m_1} & \frac{k_1}{m_1} & \frac{c_1}{m_1} & 0 & 0 \\ 0 & 0 & 0 & 0 & 0 & 1 & 0 & 0 \\ \frac{k_3}{m_2} & \frac{c_3}{m_2} & \frac{k_1}{m_2} & \frac{c_1}{m_2} & -\frac{k_1+k_2+k_3+k_a}{m_2} & -\frac{c_1+c_2+c_3+c_a}{m_2} & \frac{k_a}{m_2} & \frac{c_a}{m_2} \\ 0 & 0 & 0 & 0 & 0 & 0 & 0 & 1 \\ 0 & 0 & 0 & 0 & \frac{k_a}{m_a} & \frac{c_a}{m_a} & -\frac{k_a}{m_a} & -\frac{c_a}{m_a} \end{bmatrix}$$

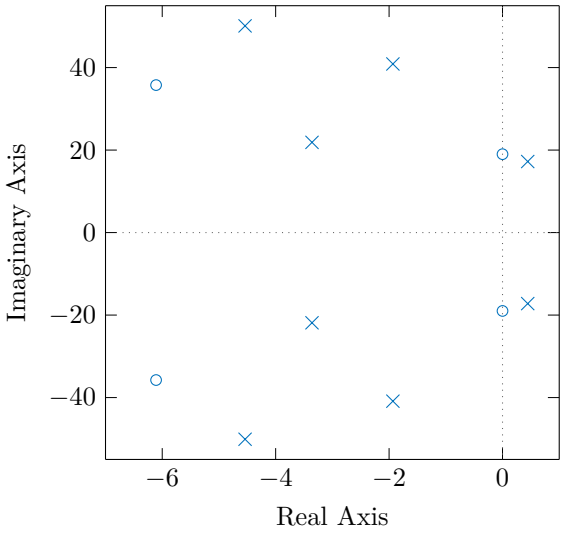

Fig. 3. Pole-zero plot after assigning zeros without simultaneous stabilization

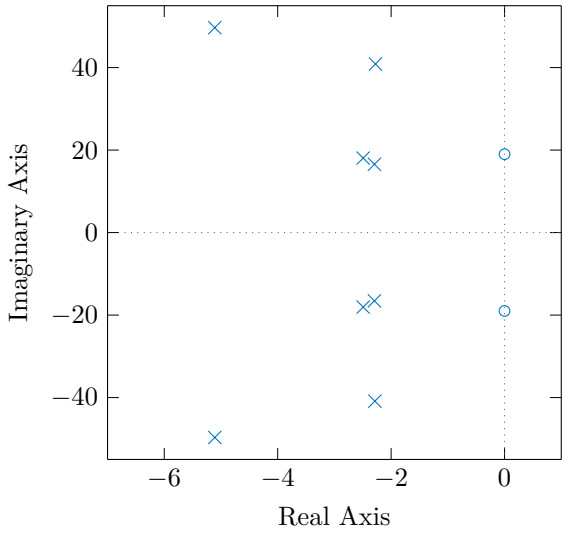

Fig. 4. Pole-zero plot after stabilization with zero location constraints

using (6). Fig. 3 shows that there is indeed a pair of zeros at the desired location on the imaginary axis but also that there are poles on the right half-plane causing the system to be unstable. It means that for this frequency we cannot accomplish the task of vibration suppression with the first controller only. Following the optimization procedure (7) we select for the stabilizing controller the feedback matrix $K = [317\ -13]$, to obtain from (6) the gain $g \approx -211.54\text{Nm}^{-1}$ and delay $\tau \approx 0.1558$s. In Fig. 4 the poles and zeros close to the imaginary axis are shown when both controllers are applied. The eigenvalues have been successfully shifted to the left-half plane while the zero locations constraints are again satisfied (note the two right-most eigenvalue pairs which explain why it is not possible to further decrease the spectral abscissa with a two dimensional static controller).

Fig. 5 shows a simulation result with the displacements of all the bodies for an excitation force with amplitude $F = 4$N. In the beginning the controller used to suppress the vibrations is not turned on (i.e. $u_1 = 0$) such that the vibrations which the target body undergoes are visible. At $t = 10$s the controller is turned on and after a transient period the vibrations of x_1 are indeed successfully suppressed. As can also be seen in Fig. 5, silencing x_1 is at the cost of slight amplification of x_0 and more distinct amplification of the absorber mass amplitude x_a.

5. CONCLUSION

The concept of non-collocated vibration absorption recently introduced by Olgac and Jenkins was extended to a general system structure where a resonant substructure cannot be identified. The design of the active absorber feedback rests on directly assigning imaginary axis zeros of the transfer function between the periodic disturbance force and the target. Even though the problem was studied for a three body lumped system, the proposed method is generally valid and the extension to a more complex structure is straightforward. Besides, an additional controller is included to the scheme to achieve or enhance stability of the overall system. Future research steps involve experimental verification of the proposed concept. Subsequently, the attention will be paid to optimizing the parameters and position of the absorber and the stabilizing controller actuation. Feasibility ranges of the suppression frequency shall also be studied.

REFERENCES

Eris, O., Alikoc, B., and Ergenc, A. F. (2018). A new Delayed Resonator design approach for extended operable frequency range. *Journal of Vibration and Acoustics* 140.4, 041003.

Fenzi, L., Pilbauer, D., Michiels, W., and Vyhlidal, T. (2017). A probabilistic approach towards robust stability optimization, with application to vibration control. *Proceedings of the 9th European Nonlinear Dynamics Conference*, 1–10.

Filipović, D. and Olgac, N. (2002). Delayed resonator with speed feedback–design and performance analysis. *Mechatronics* 12.3, 393–413.

Hosek, M., Elmali, H., and Olgac, N. (1997). A tunable torsional vibration absorber: the centrifugal delayed resonator. *Journal of Sound and Vibration* 205.2, 151–165.

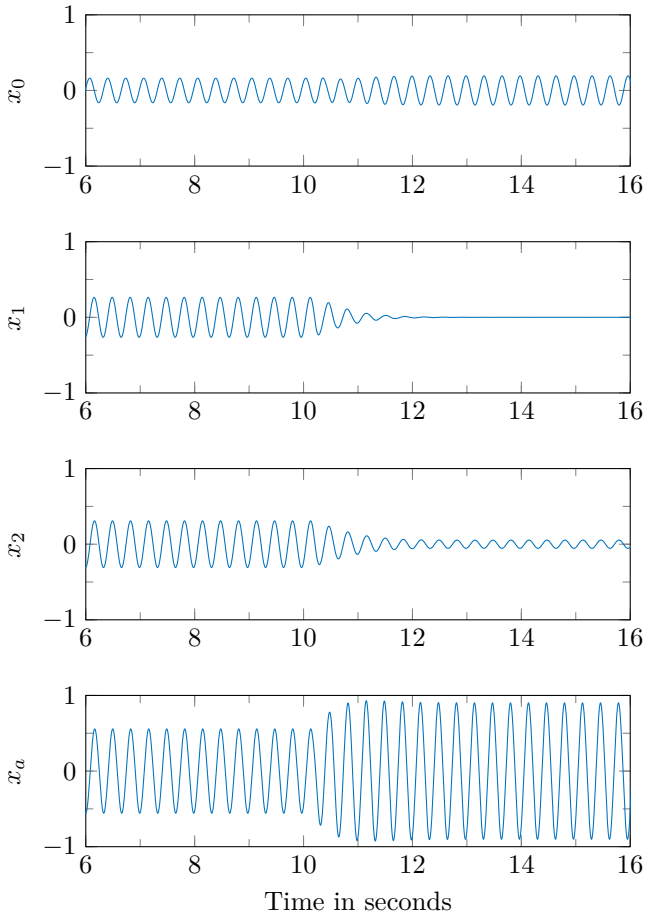

Fig. 5. Displacement of the bodies in cm with respect to time. The controller for the vibration suppression is turned off in the beginning, when at $t = 10$s it is turned on and after a transient period the vibrations at the target mass m_1 vanish.

Hosek, M. and Olgac, N. (2002). A single-step automatic tuning algorithm for the delayed resonator vibration absorber. *Mechatronics, IEEE/ASME Transactions on* 7.2, 245–255.

Jalili, N. and Olgac, N. (1999). Multiple delayed resonator vibration absorbers for multi-degree-of-freedom mechanical structures. *Journal of Sound and Vibration* 223.4, 567–585.

Jenkins, R. and Olgac, N. (2019). Real-time tuning of delayed resonator-based absorbers for spectral and spatial variations. *Journal of Vibration and Acoustics* 141.2, 021011.

Kučera, V., Pilbauer, D., Vyhlídal, T., and Olgac, N. (2017). Extended delayed resonators – Design and experimental verification. *Mechatronics* 41, 29–44.

Kuře, M., Vyhlídal, T., Michiels, W., and Boussaada, I. (2018). Spectral design of robust delayed resonator by double-root assignment. *IFAC-PapersOnLine* 51.14, 72–77.

Michiels, W., Vyhlídal, T., and Zítek, P. (2010). Control Design for Time-Delay Systems Based on Quasi-Direct Pole Placement. *Journal of Process Control* 20.3, 337–343.

Olgac, N. and Holm-Hansen, B. (1994). A novel active vibration absorption technique: delayed resonator. *Journal of Sound and Vibration* 176.1, 93–104.

Olgac, N. and Hosek, M. (1997). Active vibration absorption using delayed resonator with relative position measurement. *Journal of vibration and acoustics* 119.1, 131–136.

Olgac, N. and Jenkins, R. (2020). Time-Delayed Tuning of Vibration Absorbers for Non-Collocated Suppression. *2020 American Control Conference (ACC)*, 1381–1386.

Olgac, N. (1995). Delayed resonators as active dynamic absorbers. US Patent 5,431,261.

Olgac, N., Elmali, H., Hosek, M., and Renzulli, M. (1997). Active vibration control of distributed systems using delayed resonator with acceleration feedback. *Journal of dynamic systems, measurement, and control* 119.3, 380–389.

Olgac, N. and Jenkins, R. (2021). Actively Tuned Non-collocated Vibration Absorption: An Unexplored Venue in Vibration Science and a Benchmark Problem. *IEEE Transactions on Control Systems Technology* 29.1, 294–304.

Overton, M. L. (2021). HANSO. HANSO: Hybrid Algorithm for Non-Smooth Optimization. URL: `https://cs.nyu.edu/faculty/overton/software/hanso/index.html` (visited on 02/11/2021).

Pilbauer, D., Vyhlídal, T., and Olgac, N. (2016). Delayed Resonator With Distributed Delay in Acceleration Feedback - Design and Experimental Verification. *IEEE/ASME Transactions on Mechatronics* 21.4, 2120–2131.

Pilbauer, D., Vyhlídal, T., and Michiels, W. (2019). Optimized design of robust resonator with distributed time-delay. *Journal of Sound and Vibration* 443, 576–590.

Preumont, A. (2018). Vibration Control of Active Structures: An Introduction. 4th ed. Solid Mechanics and Its Applications. Springer International Publishing.

Rivaz, H. and Rohling, R. (2007). An active dynamic vibration absorber for a hand-held vibro-elastography probe. *Journal of Vibration and Acoustics* 129.1, 101–112.

Šika, Z., Vyhlídal, T., and Neusser, Z. (2021). Two-Dimensional Delayed Resonator for Entire Vibration Absorption. *Journal of Sound and Vibration* 500, 116010.

Valášek, M., Olgac, N., and Neusser, Z. (2019). Real-time tunable single-degree of freedom, multiple-frequency vibration absorber. *Mechanical Systems and Signal Processing* 133, 106244.

Vyhlídal, T., Olgac, N., and Kučera, V. (2014). Delayed resonator with acceleration feedback–Complete stability analysis by spectral methods and vibration absorber design. *Journal of Sound and Vibration* 333.25, 6781–6795.

Vyhlídal, T., Pilbauer, D., Alikoç, B., and Michiels, W. (2019). Analysis and design aspects of delayed resonator absorber with position, velocity or acceleration feedback. *Journal of Sound and Vibration* 459, 114831.