Preprints, 12th IFAC Workshop on Time Delay Systems
June 28-30, 2015. Ann Arbor, MI, USA

Spectral design of output feedback controllers for systems pre-compensated by input shapers

Dan Pilbauer [*,**] **Tomáš Vyhlídal** [*] **Wim Michiels** [**]

[*] *Dept. of Instrumentation and Control Eng., Faculty of Mechanical Engineering, Czech Technical University in Prague, Technická 4, 166 07 Praha 6, Czech Republic, (email: Tomas.Vyhlidal@fs.cvut.cz)*
[**] *Department of Computer Science, Katholieke Universiteit Leuven, Celestijnenlaan 200A, B-3001 Heverlee, Belgium, (email: Dan.Pilbauer@cs.kuleuven.be)*

Abstract: The primary objective is to investigate the applicability of spectral methods for designing feedback controllers for a closed loop system with an input shaper with time delays. The shaper is included in the feedback loop in order to pre-compensate low-damped oscillatory modes of a flexible subsystem. However, after inserting a shaper into the feedback loop, the closed loop dynamics becomes infinite dimensional. A robust controller design then requires guaranteeing that all the infinitely many poles of the closed loop system will safely be located in the left half of the complex plane. Besides, the closed loop dynamics need to be sufficiently fast in order to take over and keep filtering properties of the input shaper. For the spectral design of the controller, the recently developed spectral abscissa minimization approach for interconnected time delay systems is applied. The presented methods are tested on a case study simulation example, which is a multi-degree of freedom mechanical system.

Keywords: Input shaping, pole placement, interconnected systems

1. INTRODUCTION

Signal shaping involving time delays in the structure of open loop system is a well known technique for compensating the undesirable oscillatory modes of various mechanical systems. The first results on the topic have been derived by Smith (1958), by introducing a well-known posicast filter. Subsequently, various types of shapers have been proposed and investigated by Singer and Seering (1990), Singhose et al. (1994). Next to the zero-vibration (ZV) shaper of an analogous structure as the posicast, they developed more robust zero-vibration-derivative (ZVD) shaper and extra insensitive (EI) shaper, Singhose et al. (1997). These were followed by multi-modes shapers tuned to two or more selected flexible modes Singhose and Sung (2009), Tuttle and Seering (1994), Cole (2011).

Next to the feed-forward shaper-system interconnection, strong attempts to incorporate signal shapers directly into feedback loops can be identified. Such an arrangement should handle in principle not only the effect of the reference command (always known, or measurable), but also the effect of unmeasurable disturbances to the excitation of the flexible modes. Smith (1958) himself recognized this potential application of his PosiCast shaper and developed a scheme with a compensator and a shaper in the feedback solving the given task. However, as shown by Vyhlidal et al. (2015b), the application of the rather complex scheme can be applied if and only if both the controller and the system are biproper. Subsequently, in Hung (2003), a direct augmentation of the standard feedback loop with pre-tuned input command shaper was proposed. Closed loop stability issues related to this setup are further discussed by Huey and Singhose (2010) using root locus diagrams, and by Staehlin and Singh (2003). It can be concluded however that the signal shaper being placed in the loop between the controller and the system is rather ineffective in the given objective of suppressing the vibrations caused by disturbance variables. For example, in Huey, et al. (2008), it is shown that the architecture is effective in suppressing the sensor disturbances, but completely ineffective in suppressing the oscillations themselves as they are excited by the disturbance, see also Vyhlidal et al. (2015b). Let us remark that the ability of this scheme to reject sensor errors effectively has also been experimentally demonstrated in the study by Zuo et al. (1995).

Following the preliminary results in Vyhlidal et al (2013a), the novel and for the given task entirely efficient feedback loop architecture has been proposed in Vyhlidal et al. (2015b), including both simulation and experimental verification, see also Vyhlidal et al (2014) for the double mode compensation task. The method, which will be addressed in the following preliminary section in more detail, is based on including an inverse shaper to the feedback

⋆ The presented research has been supported by the Czech Science Foundation under the project No. 13-06962S, by the Programme of Interuniversity Attraction Poles of the Belgian Federal Science Policy Office(IAP P6- DYSCO), by OPTEC, the Optimization in Engineering Center of the KU Leuven, and the project G.0712.11N and G.0717.11N of the Research Foundation - Flanders (FWO).

Copyright © IFAC 2015

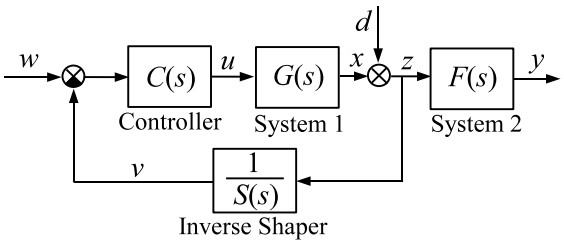

Fig. 1. Inverse shaper implementation within the closed loop.

loop. However, none of the classical shapers with lumped delay is applicable, as the overall closed loop would be of undesirable neutral dynamics. Instead, new types of shapers based on distributed delays need to be applied, Vyhlidal et al (2013b), Vyhlidal et al (2013c), Vyhlidal et al. (2015a) providing retarded dynamics of the closed loop system.

The first objective of the paper is to demonstrate the applicability of the inverse shaper to a more complex system utilizing output feedback from all the available (measured) outputs in a multi-degree of freedom mechanical system. Subsequently, the main result is the application of the spectral design of the controller, using a recently developed pole placement method for interconnected time delay systems, Michiels and Niculescu (2014). According to the authors knowledge, no such a step by step procedure for designing a controller for a system with input shaper(s) has been considered so far. In Vyhlidal et al. (2015b), the controller tuning was done simply by loop shaping in the frequency domain. An available alternative is to consider the original scheme by Smith (1958), where the delay is removed from the loop by a compensator. Thus the controller can be designed for shaper/delay free system. However, as shown in Vyhlidal et al. (2015b) and as already mentioned, this ideal compensation is limited only to the cases when both the system and the controller are biproper.

2. PRELIMINARIES

In Vyhlidal et al (2013a),Vyhlidal et al. (2015b), a closed loop architecture with the inverse shaper according to Fig. 1 was proposed. Consider System 1 with an input u and the output y has the strictly proper transfer function $G(s)$, and System 2, the flexible part, features the transfer function matrix $F(s)$, with y being the system output and $z = d + x$ being its input, d is unmeasurable disturbance. The feedback position controller for System 1 has a transfer function $C(s)$. The inverse shaper transfer function is given by $\frac{1}{S(s)}$.

The purpose of including the inverse shaper to the feedback loop is to project its filtering (mode compensation) properties, to the transfer functions of the closed loop system

$$T_{yw}(s) = \frac{C(s)G(s)}{1 + C(s)G(s)\frac{1}{S(s)}}F(s) = \frac{C(s)G(s)S(s)}{S(s) + C(s)G(s)}F(s), \tag{1}$$

$$T_{yd}(s) = \frac{1}{1 + C(s)G(s)\frac{1}{S(s)}}F(s) = \frac{S(s)}{S(s) + C(s)G(s)}F(s). \tag{2}$$

Suppose the oscillatory mode of the flexible System 2 is represented by the natural frequency ω_0 and the damping ratio ζ, determining the complex conjugate couple of poles $r_{1,2} = -\beta \pm j\Omega$, $\beta = \zeta\omega_0, \Omega = \omega_0\sqrt{1-\zeta^2}$. Then, if the shaper $S(s)$ is designed to compensate this pole by its zero $s_{1,2} = r_{1,2}$, this zero-pole compensation will project to the transfer functions (1) and (2), because $S(s)$ appears in their numerators. However, as discussed in Vyhlidal et al. (2015b), the controller $C(s)$ needs to be designed so that the transfer functions $\frac{C(s)G(s)S(s)}{S(s)+C(s)G(s)}$ and $\frac{S(s)}{S(s)+C(s)G(s)}$ have no poles in the vicinity of $r_{1,2}$. Further on, the design efforts should lead to a controller $C(s)$ ensuring a comparatively fast closed loop dynamics; with the crossover frequency significantly greater than the frequency of the target mode addressed by the inverse shaper $r_{1,2}$. It has also been shown in Vyhlidal et al. (2015b) that the $S(s)$ zeros of large magnitudes are projected to the poles of the closed loop system. This is the key reason for implementing the distributed delay shapers in this feedback architecture as their spectra are retarded, unlike the spectra of the classical shapers with lumped delays, which are neutral.

The zero vibration ZV shaper with a distributed delay was recently proposed by the authors in Vyhlidal et al (2013c), following the earlier developments in Vyhlidal et al (2013b), as follows

$$v(t) = aw(t) + (1-a)\int_0^T w(t-\eta)dh(\eta), \tag{3}$$

where w and v are the shaper input and output, respectively, $a \in \mathbb{R}^+, a < 1$ is the gain parameter, and the delay's distribution is prescribed by the function $h(.)$, which is non-decreasing on the interval $[0, T]$. Considering that the overall delay consists of a series of lumped and equally distributed delay of the lengths τ, we obtain DZV shaper Vyhlidal et al (2013c), with the transfer function

$$S_{DZV}(s) = a + (1-a)\frac{e^{-s\tau} - e^{-s2\tau}}{\tau s}. \tag{4}$$

The shaper is parameterized with the objective to place its dominant zero $s_{1,2}$ at the position of the oscillatory mode $r_{1,2}$ to be compensated. The parameterization was proposed numerically in Vyhlidal et al (2013c). Recently, a fully analytical design was proposed in Vyhlidal et al. (2015a).

Robustness of the vibration suppression of the shaper-system interconnection with respect to the difference between the design frequency ω_n and true natural frequency ω_0 of the mode to be cancelled can be visualized by the sensitivity curves $V(\omega, \zeta)$, Singhose and Sung (2009), representing the ratio between the impulse response amplitudes of the system pre-compensated by the shaper and the oscillatory system alone at time $t = T$. It can be expressed as $V(\omega, \zeta) = \left|S\left(-\omega\left(\zeta + j\sqrt{1-\zeta^2}\right)\right)\right| \mathrm{e}^{-\zeta\omega T}$. Thus, if the shaper is tuned properly, $V(\omega, \zeta) = 0$ for $\omega = \omega_n$. For the zero vibration shapers, quality of the compensation decays considerably, if there exists a mismatch between ω_0 and ω_n, as documented in Fig. 2, where we compare DZV shaper (4) with a standard ZV shaper described by

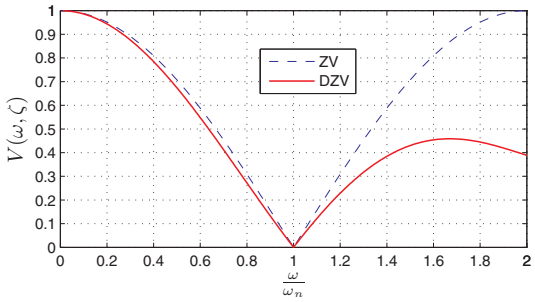

Fig. 2. Residual vibration sensitivity curve of the DZV shaper (4) in comparison with the sensitivity curve of the classical ZV shaper, Vyhlidal et al (2013c).

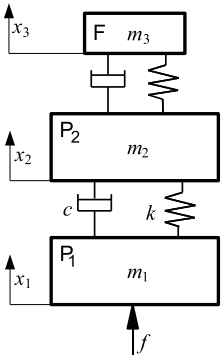

Fig. 3. Mechanical set-up, P1- P2 - system, F - flexible subsystem

$$S_{ZV}(s) = a + (1-a)e^{-sT}. \tag{5}$$

This lack of robustness can be overcome by considering more robust alternatives, e.g. ZVD or EI shapers with classical delays, see Singhose et al. (1997) or their alternatives with distributed delays proposed recently in Vyhlidal et al. (2015a), see also preliminary work Vyhlidal et al (2013d). As the extension of the derived results towards robust shapers applications is straightforward, for simplicity, the zero vibration shapers are considered in this work only.

Notice also that no backward coupling from System 2 to System 1 is considered in the scheme in Fig. 1. The coupling case was briefly addressed in Vyhlidal et al. (2015b), but due to the complexity of determining the mode to be compensated, the problem is left for further research.

3. CASE STUDY EXAMPLE

Consider the mechanical system consisting of $\boldsymbol{P_1}$ and $\boldsymbol{P_2}$ as given in Fig. 3, which is described by

$$\dot{\boldsymbol{x}}(t) = \boldsymbol{A}\boldsymbol{x}(t) + \boldsymbol{B}u(t-\delta) \tag{6}$$

with the matrices

$$\boldsymbol{A} = \begin{bmatrix} 0 & 0 & 1 & 0 & 0 \\ 0 & 0 & 0 & 1 & 0 \\ -\frac{k}{m_1} & \frac{k}{m_1} & -\frac{c}{m_1} & \frac{c}{m_1} & \frac{1}{m_1} \\ \frac{k}{m_2} & -\frac{k}{m_2} & \frac{c}{m_2} & -\frac{c}{m_2} & 0 \\ 0 & 0 & 0 & 0 & -\frac{1}{T_a} \end{bmatrix}, \boldsymbol{B} = \begin{bmatrix} 0 \\ 0 \\ 0 \\ 0 \\ \frac{S_a}{T_a} \end{bmatrix} \tag{7}$$

where $\boldsymbol{x} = [x_1, x_2, \dot{x}_1, \dot{x}_2, f]$, x_1, x_2 denoting displacements of the mechanical parts $\boldsymbol{P_1}$ and $\boldsymbol{P_2}$, f denoting the acting force and u being the control input. The parameters of the system are the masses m_1 and m_2, damping c and stiffness k coefficients. Next, the parameters of the actuator represented by a first order system plus dead time are the static gain S_a, time constant T_a and input delay δ.

The system output equations are

$$\boldsymbol{y}_1(t) = \boldsymbol{C}\boldsymbol{x}(t), \tag{8}$$

and

$$\boldsymbol{y}_2(t) = \boldsymbol{J}\dot{\boldsymbol{x}}(t), \tag{9}$$

where

$$\boldsymbol{C} = \begin{bmatrix} 1 & 0 & 0 & 0 & 0 \\ 0 & 1 & 0 & 0 & 0 \\ 0 & 0 & 1 & 0 & 0 \\ 0 & 0 & 0 & 1 & 0 \end{bmatrix} \quad \boldsymbol{J} = \begin{bmatrix} 0 & 0 & 1 & 0 & 0 \\ 0 & 0 & 0 & 1 & 0 \end{bmatrix}. \tag{10}$$

Thus, next to the positions, and velocities, also accelerations of $\boldsymbol{P_1}$ and $\boldsymbol{P_2}$ are supposed measured at the system.

Next, the subsystem $\boldsymbol{F}$ with the mass $m_3 << m_2$ is attached to the system $\boldsymbol{P_1}$-$\boldsymbol{P_2}$ by a flexible link. As the mass m_3 is much smaller than m_2, the flexible part is considered as decoupled from $\boldsymbol{P_1}$-$\boldsymbol{P_2}$. The only additional information on the system $\boldsymbol{F}$ is its oscillatory mode given by the natural frequency ω_0 and the damping ratio ζ, determining the complex conjugate couple of poles $r_{1,2} = -\beta \pm j\Omega$ which will be used for the shaper design.

The first task is to design an output feedback scheme to control the output $y_2 = x_2$ to the set-point w with the objective to suppress the oscillations of the flexible subsystem $\boldsymbol{F}$ induced by the set-point w and the system disturbances. Subsequently, the parameters of the feedback are to be designed using spectral methods.

3.1 Closed loop architecture

Consider the flexible subsystem $\boldsymbol{F}$ being represented by the transfer function $F(s) = \frac{x_3(s)}{x_2(s)}$ with the output x_3 according to Fig. 2. Next, introduce the transfer functions $G_1(s) = \frac{x_1(s)}{u(s)}$ and $G_2(s) = \frac{x_2(s)}{u(s)}$ given by

$$\begin{bmatrix} G_1(s) \\ G_2(s) \end{bmatrix} = \bar{\boldsymbol{C}}(s\boldsymbol{I} - \boldsymbol{A})^{-1}\boldsymbol{B}e^{-s\delta}, \tag{11}$$

where

$$\bar{\boldsymbol{C}} = \begin{bmatrix} 1 & 0 & 0 & 0 & 0 \\ 0 & 1 & 0 & 0 & 0 \end{bmatrix}, \tag{12}$$

and consider the system disturbances d_1 and d_2 acting at the system as shown in Fig. 4.

When designing the feedback scheme, the objective is to obtain such transfer functions linking the inputs w, d_1 and d_2 with the output x_2 which have the shaper transfer function $S(s)$ in the numerator product. Such a scheme is sketched in Fig. 4, where $C_k(s)$, $k = 1, 2, 3$ denote the controllers, for which

$$T_{x_3 w}(s) = \frac{C_3(s)G_2(s)S(s)}{M(s)}F(s), \tag{13}$$

$$T_{x_3 d_2}(s) = \frac{G_2(s)S(s)}{M(s)}F(s), \tag{14}$$

$$T_{x_3 d_1}(s) = \frac{-C_1(s)G_2(s)S(s)}{M(s)}F(s), \tag{15}$$

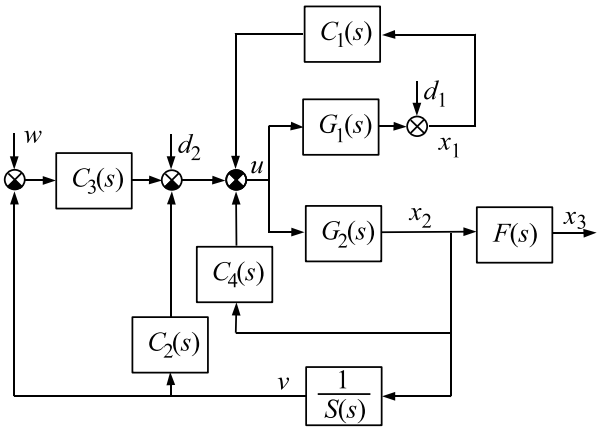

Fig. 4. Closed loop scheme with an inverse shapers

where

$$M(s) = S(s)(1 + C_1(s)G_1(s) + C_4(s)G_2(s)) + (C_2(s) + C_3(s))G_2(s). \quad (16)$$

3.2 Feedback controllers

The objective of the controller design is to utilize all the outputs of the system, i.e. positions, velocities and accelerations, that are supposed measured. The following controllers are considered

$$C_1(s) = k_1 + k_2 s + k_3 s^2, \quad (17)$$

$$C_2(s) = k_4, \quad (18)$$

$$C_3(s) = \frac{k_5}{s}, \quad (19)$$

$$C_4(s) = k_6 s + k_7 s^2. \quad (20)$$

Note that controllers $C_1(s)$ and $C_4(s)$ include direct feedback of the accelerometers' outputs. Let us also remark that the inverse of shaper (4) is described by:

$$v(t) = \frac{1}{a}\left(x_2(t) - (1-a)r(t)\right), \quad (21)$$

with the input x_2 and the output v, where

$$r(t) = \frac{1}{\tau}\int_{t-2\tau}^{t-\tau} v(\eta)d\eta. \quad (22)$$

In our controller design procedure we implement this equation dynamically as

$$\dot{r}(t) = \frac{1}{\tau}(v(t-\tau) - v(t-2\tau)). \quad (23)$$

Thus the overall controller can be expressed as

$$u(t) = -k_1 x_1(t) - k_2 \dot{x}_1(t) - k_3 \ddot{x}_1(t) - k_4 v(t) - k_5 e(t) - k_6 \dot{x}_2(t) - k_7 \ddot{x}_2(t). \quad (24)$$

where

$$\dot{e}(t) = v(t) - w(t). \quad (25)$$

The integrator in (19) is included to impose the astatism within all the closed loops. Let us recall that w is the set-point value of the controlled variable $y_2 = x_2$.

3.3 Reformulation in the DDAE standard form

For the controller design we model the overall system using delay differential algebraic equations (DDAEs), as in Michiels (2011). Assuming that the disturbances are zero, and defining two auxiliary variables $z_i := \ddot{x}_i$, $i = 1, 2$, for the accelerations of the two masses, we get, by putting together all equations, the following systems of differential and delay-difference equations:

$$\begin{cases} \dot{\boldsymbol{x}}(t) = \boldsymbol{A}\boldsymbol{x}(t) + \boldsymbol{B}u(t-\delta), \\ \dot{r}(t) = \frac{1}{\tau}(v(t-\tau) - v(t-2\tau)), \\ 0 = -v(t) + \frac{1}{a}\left(z_2(t) - (1-a)r(t)\right), \\ \dot{e}(t) = v(t), \\ 0 = -z_1(t) - \frac{k}{m_1}x_1(t) + \frac{k}{m_1}x_2(t) - \frac{c}{m_1}x_3(t) + \frac{c}{m_1}x_4(t) + \frac{1}{m_1}f(t), \\ 0 = -z_2(t) + \frac{k}{m_2}x_1(t) - \frac{k}{m_2}x_2(t) + \frac{c}{m_2}x_3(t) - \frac{c}{m_2}x_4(t). \end{cases}$$

Furthermore, when defining the generalized state and output as

$$X(t) = [x_1(t)\ x_2(t)\ x_3(t)\ x_4(t)\ f(t)\ r(t)\ v(t)\ e(t)\ z_1(t)\ z_2(t)]^T,$$
$$Y(t) = [x_1(t)\ x_3(t)\ z_1(t)\ v(t)\ e(t)\ x_4(t)\ z_2(t)]^T,$$

one can observe that the above equations are of the form

$$\begin{cases} \mathcal{E}\dot{X}(t) = \mathcal{A}_0 X(t) + \mathcal{A}_1 X(t-\tau) + \mathcal{A}_2 X(t-2\tau) + \mathcal{B}u(t-\delta), \\ Y(t) = \mathcal{C}X(t). \end{cases} \quad (26)$$

Moreover, the controller (24) takes the form

$$u(t) = -K^T(Y(t) - Y_r(t)),$$

where the gain K is given by

$$K = [k_1\ k_2\ k_3\ k_4\ k_5\ k_6\ k_7]^T$$

and the reference by $Y_r(t) := [0\ 0\ 0\ w(t)\ 0\ 0\ 0\ ]^T$.

3.4 Control design based on minimizing spectral abscissa

Our control objective is two-fold: we want to achieve a fast response, without exciting the oscillatory modes of system F. The latter is automatically achieved by including the inverse shaper in the control loop. The former is achieved by minimizing the spectral abscissa of the closed-loop system, leading to the optimization problem

$$\min_K c(K), \quad (27)$$

where the spectral abscissa is defined as

$$c(K) := \sup\{\Re(s) : \ s \in \Sigma(K) \setminus \{0\}\}, \quad (28)$$

with

$$\Sigma(K) := \left\{\lambda \in \mathbb{C} : \det\left(s\mathcal{E} - \mathcal{A}_0 - \mathcal{A}_1 e^{-s\tau} - \mathcal{A}_2 e^{-s2\tau} - \mathcal{B}K^T\mathcal{C}e^{-s\delta}\right) = 0\right\}. \quad (29)$$

Before outlining the optimization process we wish to make two important comments.

- The integral expression for r in (22) was turned into a differential equation with discrete delays, (23), by differentiation, which introduces a non-physical zero eigenvalue. In the eigenvalue computations this eigenvalue needs to be removed from the computed spectrum and explains (28).

- As shown in Michiels (2011) a DDAE may be of neutral type, which heavily affects the spectral properties and complicates algorithms for spectral computation and optimization. However, in our application the closed-loop system is of retarded type, even though we consider second-order systems and use the accelerators' output directly for feedback. The reason is that the control loop contains a *low-pass filter* describing the input dynamics (the last equation of (6)).

The function (28) is in general non convex. It may be not everywhere differentiable, even not everywhere Lipschitz continuous. A lack of differentiability may occur when there is more than one *active* eigenvalue, i.e., an eigenvalue whose real part equals the spectral abscissa. A lack of Lipschitz continuity may occur when an active eigenvalue is multiple and non-semisimple. On the contrary, the spectral abscissa function is differentiable at points where there is only one active eigenvalue with multiplicity one. Since this is the case with probability one when randomly sampling parameter values, the spectral abscissa is smooth almost everywhere.

The properties of the function (28) preclude the use of standard optimization methods, developed for smooth problems. Instead we propose a combination of BFGS with weak Wolfe line search and gradient sampling, as implemented in the MATLAB code HANSO, see Overton (2009). The overall algorithm only requires the evaluation of the objective function, as well as its derivatives with respect to parameters, *whenever* it is differentiable.

The value of the spectral abscissa can be obtained by computing the rightmost eigenvalues, using the algorithm of Michiels (2011), which extends the algorithm of Wu and Michiels (2012) to the DDAE case. If there is only one active characteristic root s_a with multiplicity one, the spectral abscissa is differentiable and we can express

$$\frac{dc}{dK} = \left[\frac{\partial c}{dk_1} \cdots \frac{\partial c}{\partial k_7}\right]^T = \frac{(w_a^* \mathcal{B})(\mathcal{C} v_a) e^{-s_a \delta}}{w_a^* \left(\mathcal{E} + \mathcal{A}_1 \tau e^{-s_a \tau} + \mathcal{A}_2 \tau e^{-2 s_a \tau} + \mathcal{B} K^T \mathcal{C} \delta e^{-s_a \delta}\right) v_a}, \tag{30}$$

where w_a and v_a are the left and right eigenvector corresponding to s_a.

For more details on the algorithm, including extensions to DDAEs of neutral type, we refer to Michiels (2011).

4. SIMULATION EXAMPLE

To demonstrate the functionality of the proposed control scheme, we provide the following simulation example. Consider the system (6)-(7) consisting of an actuator and two masses connected together by spring-dumper and coupled with the flexible structure as described in Fig. 3. The parameters are considered as $m_1 = 0.92kg$, $m_2 = 1.52kg$, $k = 980Nm^{-1}$, $c = 6.120kgs^{-1}$, $S_a = 1$, $T_a = 0.01s$, $\delta = 0.001s$. The flexible structure oscillatory mode to be compensated is defined with natural frequency $\omega_0 = 5s^{-1}$ and damping ratio $\zeta = 0.01$. The input shaper (4) parameters to compensate the given oscillatory mode are determined as $a = 0.509$ and $\tau = 0.629s$, Vyhlidal et al. (2015a).

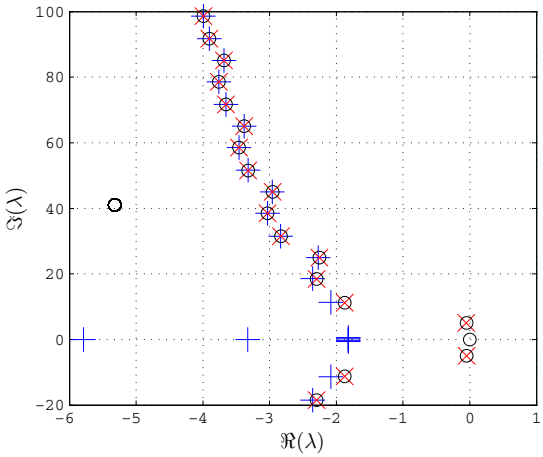

Fig. 5. Rightmost spectrum of the system, +− spectrum of the system with feedback, ×− spectrum of the designed shaper, ○− spectrum of the uncontrolled system.

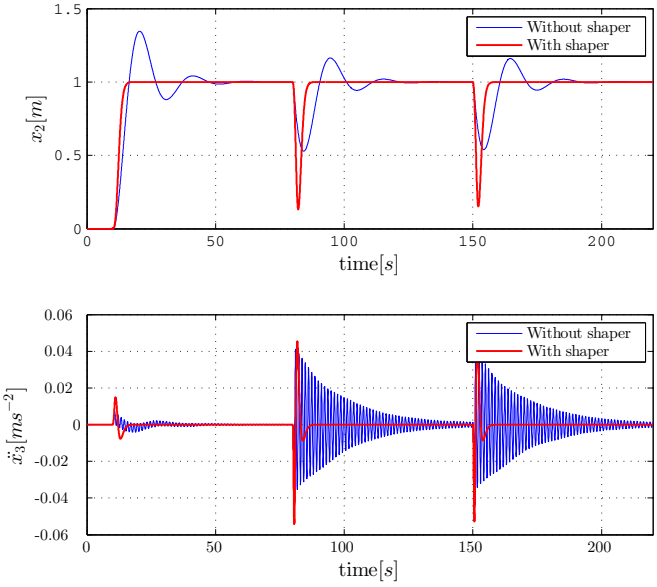

Fig. 6. System response to the setpoint change and disturbance rejection responses of the system for $w = 1$ at $t = 10$,$d_2 = -35$ at $t = 80$ and $d_1 = 0.1$ at $t = 150$. The thin blue curve is the system without shaper and the thick red is the system with inverse shaper.

First, we outline the control design by minimizing the spectral abscissa applied to the overall interconnected system (26). For this purpose, we use the optimization-based method described in sec. 3.4. Optimization process was run with condition not to stop in minimum but when spectral abscissa crosses $c(K) = -1.8$, which should provide sufficiently fast control action. This condition was satisfied with the optimized parameters $k_1 = 342.30, k_2 = 925.57, k_3 = 0.81, k_4 = -308.46, k_5 = 15.62s^{-1}, k_6 = -768.22, k_7 = 22.10$.

In Fig. 5 spectrum of the original system with shaper but without feedback, spectrum of zeros of the standalone

shaper and final spectrum after optimization process are shown. Original system is astatic system with two poles in the origin. Notice also that a couple of uncontrolled system poles is located at the position of the dominant zeros of the shaper that are placed at the position of $r_{1,2}$ corresponding to the oscillatory mode to be compensated. Primarily, these four poles needed to be pushed to the left to remove the astatism and to isolate the dominant closed loop zeros provided by the shaper. As can be seen, this task have been well satisfied. As can also be seen the high frequency spectra merge with shaper spectrum in both the cases. The simulation results are shown in Fig. 6, where a comparison of the responses of the system without the shaper (thin blue line) and with shaper (thick red line) are shown. Let us mention that to control the system without the shaper, the same parameters have been used as for controlling the system with the shaper for which their design was performed. This causes quality decay of the responses which are less damped compared to the responses of the system with inverse shaper. However, still, it is clearly seen that any action at the system excites high frequency mode of the flexibly subsystem. Figure contains responses to the reference w, input disturbance d_2 and output disturbance d_1. Compared to the control without shaper, no oscillations can be seen in any of the responses of the system with inverse input shaper in the loop. Thus, the control design objective has been fulfilled as the oscillations have been excited by neither the set-point w changes, nor by the disturbances d_1 and d_2.

5. CONCLUSIONS

We demonstrated the applicability and potential of including the recently proposed inverse DZV shaper in a feedback loop with a multi-degree of freedom mechanical system, in order not to excite weakly damped oscillatory modes. The resulting closed-loop systems is a delay system, whose spectrum was shaped using a direct optimization approach. In order to achieve a fast response we adopted an approach based on minimizing the spectral abscissa function. In future work we will combine the spectral abscissa minimization with partial pole assignment and perform the experimental verification of the proposed scheme.

REFERENCES

Cole M. O. T. (2011) A discrete-time approach to impulse-based adaptive input shaping for motion control without residual vibration, *Automatica*, Volume 47, Issue 11, November 2011, Pages 2504-2510.

Huey J. R., Singhose W.E., (2010), Trends in the Stability Properties of CLSS Controllers: A Root-Locus Analysis, *IEEE Transactions on control system technology*, Vol. 18, No. 5, pp. 1044-1056.

Huey J. R., Sorensen K. L., Singhose W. E., (2008), Useful application of closed-loop signal shaping controllers, *Control Engineering Practice*, Vol. 16, pp. 836-846

Hung J. Y., (2003), Feedback Control With Posicast., *IEEE Transactions on industrial electronics*, Vol. 50, No. 1, pp. 94-99.

Michiels, W., (2011) Spectrum based stability analysis and stabilization of systems described by delay differential algebraic equations, *IET Control Theory and Applications*, Vol. 5, Issue 16, pp. 1829-1842

Michiels, W., Niculescu, S., (2014), *Stability, Control, and Computation of time-delay systems. An eigenvalue based approach*. Advances in Design and Control 27, SIAM Publications, Philadelphia

Overton M., HANSO: a hybrid algorithm for nonsmooth optimization. Available from `http://cs.nyu.edu/overton/software/hanso/`, 2009.

Singer N.C., Seering W.P. (1990), Preshaping command input to reduce system vibration, *Journal of Dynamics, System, Measure and Control*, vol 112., pp 76-82.

Singhose W.E., Seering W., Singer N.C. (1994), Residual vibration reduction using vector diagrams to generace shaped inputs, *Journal of Mechanical Design*, Vol. 116, pp 654-659

Singhose W.E., Sung Y.G., (2009), Robustness analysis of input shaping commands for two-modes flexible systems, *IET Control Theory and Applications*, Vol. 3, Iss. 6, pp. 722-730

Smith O.J.M., (1958) *Feedback Control Systems*. New York: McGraw-Hill Book Co., Inc.

Singhose W., E. Crain, W. Seering (1997), Convolved and simultaneous two-mode input shapers, *Control Theory Appl.*, Vol. 144, No. 6.

Staehlin U., Singh T. (2003), Design of closed-loop input shaping controllers, in *American Control Conference*, Denver, Co, pp. 5167-5172.

Tuttle, T.D., Seering, W.P, (1994) A zero-placement technique for designing shaped inputs to suppress multiple-mode vibration, *American Control Conference*, Vol. 3, pp 2533-2537.

Vyhlidal T., Hromcik M., Kucera V., (2013a), Inverse signal shapers in effective feedback architecture. *European Control Conference 2013*, Zurich, p. 4418-4423 .

Vyhlidal T., Kucera V., Hromcik M, (2013b), Signal shapers with distributed delays: spectral analysis and design, *Automatica*, Vol. 49, Issue 11, pp. 3484-3489

Vyhlidal T., Kucera V., Hromcik M., (2013c), Zero vibration shapers with distributed delays of various types, 52nd *Conference on Decision and Control*, Firenze, Italy, December 10-13, p. 940-945

Vyhlidal T., Kucera V., Hromcik M. (2013d), Spectral features of ZVD shapers with lumped and distributed delays. In: *Proceedings of the 9th Asian Control Conference (ASCC 2013)*. Istanbul, Turkey DOI: 10.1109/ASCC.2013.6606315

Vyhlidal T., Hromcik M., Kucera V., Anderle M. (2014). Double oscillatory mode compensation by inverse signal shaper with distributed delays. *European Control Conference 2014*,June 24-27 2014, Strasbourg, p. 1121-1126

Vyhlidal T., Hromcik M. (2015a) Parameterization of zero vibration shapers with delays of various distribution, *Automatica*, accepted.

Vyhlidal T., Hromcik M., Kucera V., Anderle M. (2015b) On feedback architectures with zero vibration signal shapers, conditionally accepted. to *IEEE TAC*.

Wu, Z. and Michiels, W. (2012) Reliably computing all characteristic roots of delay differential equations in a given right half plane, *Journal of Computational and Applied Mathematics*, vol. 236, pp. 2499-2514.

Zuo K., Drapeau V. and Wang D. (1995) Closed Loop shaped-input strategies for flexible robots, *International Journal of Robotics Research*, vol. 14, no. 5, pp. 510-529.