Delayed dynamic-feedback controller design for multi-frequency vibration suppression

Adrian Saldanha [*,**] **Adam Peichl** [**] **Wim Michiels** [*]
Tomas Vyhlidal [**]

[*] *Department of Computer Science, KU Leuven, Celestijnenlaan 200A, 3001 Leuven, Belgium ({adrian.saldanha,wim.michiels}@kuleuven.be)*
[**] *Dept. Instrumentation and Control Engineering, Faculty of Mechanical Engineering and Czech Institute of Informatics, Robotics and Cybernetics, Czech Technical University in Prague, Prague 6, Czechia (adam.peichl,tomas.vyhlidal@fs.cvut.cz)*

Abstract:
We present a methodology for designing a dynamic controller with delayed output feedback for achieving non-collocated vibration suppression with a focus on the multi-frequency case. To synthesize the delay-based controller, we first remodel the system of equations as a delay-differential algebraic equation (DDAE) in such a way that existing tools for design of a static output feedback controller can be easily adapted. The problem of achieving non-collocated vibration suppression with sufficient damping is formulated as a constrained optimization problem of minimizing the spectral abscissa in the presence of zero-location constraints, with the constraints exhibiting polynomial dependence on its parameters. We transform the problem into an unconstrained one using elimination, following which we solve the resulting non-convex, non-smooth optimization problem.

Keywords: vibration suppression, time-delay, DDAE

1. INTRODUCTION

In the context of vibration suppression, the setting wherein a so-called absorber or an actuating device is placed at a location remote from the target point of suppression is referred to as the *non-collocated* setting. The need for such a setting usually follows from the practical impossibility of placing absorber precisely at the target location. This makes controller design a challenging task, as any actuation effort for suppressing disturbances at the remote target must be transmitted to the target via the interconnected masses.

Noteworthy studies on the topic of non-collocated vibration suppression include: Buhr et al. (1997), Yang and Mote (1992). In the former, an adaptive-passive approach is presented wherein a vibration absorber is used to provide steady-state vibration control using a robust control law for suppressing single-harmonic excitations. In Yang and Mote (1992), a time-delay was introduced to account for the phase difference between the actuator and sensor, thereby transforming the non-collocated problem into a collocated one. In Olgac and Jenkins (2021) and Jenkins and Olgac (2019), the authors present a method to suppress vibrations at a remote target by first identifying a resonating substructure within the complete setup and then by tuning the gain and delay of the non-collocated absorber such that the resonant frequency of the substructure is unified with the single harmonic excitation frequency. In Silm et al. (2024), the non-collocated problem is addressed with the control design involving direct assignment of imaginary zeros of the transfer function between the harmonic disturbance and the target. Due to limited stability regions, two separate controllers are used. The first is tuned to suppress the desired harmonic disturbances, while the second acts as a stabilizing controller.

We approach the multi-frequency case in a similar way i.e. first, we recast the problem of suppressing vibrations of finite discrete frequencies into assigning transmission zeros of the transfer function, constructed from the external force to the target mass's position, on the imaginary axis at the select frequencies. One can find vast literature on similar *anti-resonance assignment* techniques see Richiedei et al. (2022b), Richiedei et al. (2022a). We refer the text Richiedei and Tamellin (2021) for a detailed survey of literature on such methods. In the non-collocated problem setting, the number of outputs available for feedback are often limited, and therefore the available free controller parameters are insufficient. This poses a limitation on the number of frequencies that can be targeted, or makes it difficult to achieve a higher-level control task such as stabilization, tracking control, etc.

In Saldanha et al. (2024), the author's team presented a non-collocated controller design methodology using a single control input and alternately with multiple inputs. The admissible frequencies in the single-input setting were

⋆ The presented research was supported by the project G092721N of the Research Foundation-Flanders (FWO-Vlaanderen) and by the Czech Science Foundation under the project 24-10301S. The second author acknowledges support by the Grant Agency of the Czech Technical University in Prague, grant No. SGS24/125/OHK2/3T/12.

limited by the number of outputs available for feedback. For the multi-input setting instead, the greater number of free parameters resulting from the extra inputs provide for more admissible frequencies. However, this is limited by the number of actuators physically available and in the ideal setting, we are interested in developing a control methodology using a single-input, which can be expandable to the multi-input setting. In Saldanha et al. 2023, the authors propose a design method using a single control input, by adding multiple delays in the feedback to maximize the stability margin, but this method was applied to a single frequency setting.

We expand on this idea of adding multiple delays in order to extend the range of admissible frequencies. The addition of multiple delays to the output feedback can be seen as incorporating derivative information and fits into the framework of intentionally adding delays for control purposes (Abdallah et al. 1993), (Niculescu and Michiels 2004). The classic delayed resonator (Olgac and Holm-Hansen 1995) is an ideal example of using delays in vibration suppression. Valasek et al. (Valášek et al. 2019) extended the scope of the delayed resonator control scheme to handle multiple and time-varying frequencies, using a single-mass absorber. The control scheme utilizes position feedback and multiple delays to target a total of two discrete frequencies, and it applies to the collocated setting only.

In this work, we target the *multi-frequency* vibration suppression problem. The solution can be seen as an extension of the methodology presented in the aforementioned article of Saldanha et al. (2023). The considered controller design bears a nice property in that the zero-location constraints were affine in the controller parameters K. In this text, in addition to delaying the outputs by multiple fixed delays, we feed the delayed outputs to a dynamic feedback controller of fixed order. With the presence of the dynamic feedback, it is shown later that the constraints are no longer affine in these parameters, but instead are polynomial in these parameters. We demonstrate how to remodel the problem in terms of delay-differential algebraic equations (DDAEs), enabling a formulation of the design problem as a constrained optimization problem in a form which closely resembles that of the multi-input setting in Saldanha et al. (2022).

The rest of the paper is organized as follows. In Section 2, we outline the problem and provide a motivation for the adopted controller structure, following which, we present the control design methodology in Section 3. The application of the proposed method is demonstrated in a case study in Section 4, with the conclusions in Section 5.

2. MOTIVATION AND PROBLEM FORMULATION

2.1 Problem setting

Let us assume a vibration controller setup modelled by the equations

$$\begin{aligned} \dot{x}(t) &= A_0 x(t) + B_1 u(t-\tau_u) + B_2 f_d(t) \\ y(t) &= C_1 x(t) \\ z(t) &= C_2 x(t), \end{aligned} \tag{1}$$

where x is the state vector, y the feedback outputs and z representing the position of the target where we wish to cancel vibrations. The matrix A_0 is the state matrix corresponding to the non-delayed state $x(t)$. $B_2 \in \mathbb{R}^{n\times 1}$ describes the entry point corresponding to the external disturbance force $f_d(t) = \sum_{i=1}^{m} F_d \cos \omega_i t$ with $\omega_i = 2\pi f_i$, f_i being the discrete harmonic frequencies and $C_2 \in \mathbb{R}^{1\times n}$ describes the target mass's position. Control input matrix B_1 corresponds to control input u, which is subject to inherent time-delay τ_u. Feedback output matrix C_1 describes measured outputs y available to the controller. In the general setting $B_1 \in \mathbb{R}^{n\times p}$ and $C_1 \in \mathbb{R}^{q\times n}$ i.e. we consider the setting with multiple inputs and outputs, with p and q representing the number of control inputs and measured outputs respectively.

2.2 Control objective

We focus on designing a *low-authority controller* (LAC) for suppressing vibrations of multiple harmonics $\omega_i, i = 1,\dots,m$. In addition to the objective of vibration suppression, we also focus on maximizing the stability margin of the resulting closed-loop system.

To motivate the adopted controller, let us first look at the case of a static output feedback controller without delays i.e.

$$u(t) = K^T y(t). \tag{2}$$

Without the loss of generality, we formulate our methodology for a single-input controller, which can easily be expanded to a controller with multiple inputs. For the single-input setting $B_1 \in \mathbb{R}^{n\times 1}$ and with q outputs, we have $C_1 \in \mathbb{R}^{q\times n}$. The gain matrix $K \in \mathbb{R}^{1\times q}$, with which, we have q free parameters available for manipulation.

The objective of suppressing vibrations of a set of frequencies can be translated into a problem of placing the transmission zeros of the transfer function from the external force f_d to the position of the target mass z. Cancelling single frequency oscillations requires at least two controller parameters and for m harmonics, we would require a minimum of $2m$ free controller parameters. In the limiting case, $q = 2m$, no free parameters are available for any additional task such as tracking or stability optimization.

Instead, we present a two-step complementary method of extending the scope of a static output feedback controller:

(1) using intentional output delays and
(2) using dynamic output feedback with the delayed output measurements

Starting from the output vector y, we first delay this output by multiple fixed delays viz. $\tau_i, i = 1,\dots,N$ and create a new vector of delayed inputs y_d as

$$y_d(t) = [y_1^T \quad y_2^T \quad \dots \quad y_N^T]^T \tag{3}$$

where $y_i = y(t-\tau_i), \quad i = 1,\dots,N$, N being the number of delays. Here, $y_d \in \mathbb{R}^{n_y \times N}$. Due to the N added delays, we now have $N \times n_y$ free parameters available for control.

The presence of an input delay in itself results in an infinite-dimensional closed-loop system. The infinite-dimensionality of the system further motivates for the addition of more delays in the output.

In the next step of the design, the delayed outputs are fed to a dynamic feedback controller of the form

$$\begin{aligned} \dot{x}_c(t) &= A_c x_c(t) + B_c y_d(t) \\ u(t) &= C_c x_c(t) + D_c y_d(t). \end{aligned} \tag{4}$$

Here, $A_c \in \mathbb{R}^{n_c \times n_c}$, $B_c \in \mathbb{R}^{n_c \times (n_y \times N)}$, $C_c \in \mathbb{R}^{n_u \times n_c}$ and $D_c \in \mathbb{R}^{n_u \times (n_y \times N)}$. Figure 1 shows the schematic diagram of the closed-loop system with the delayed feedback and the dynamic controller part.

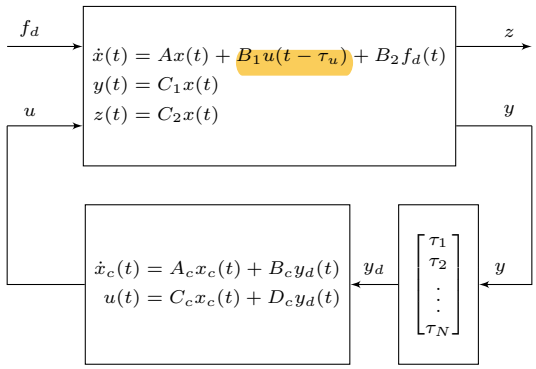

Fig. 1. Block diagram of the dynamic controller with delayed feedback

3. METHODOLOGY

The inherent delays in the input and the artificially induced delays in the feedback outputs, together with the presence of dynamic feedback increase the design complexity. To account for this added complexity, the system of equations is remodelled as a Delay-Differential Algebraic Equation (DDAE). We use DDAEs since it helps to account for various feedback interconnections using a relatively simple structure. Additionally, for our controller design, we use the MATLAB® package `TDS-CONTROL`, which is a package for designing controllers for time-delay systems that supports DDAE models.

3.1 Remodelling the system

By introducing a new state vector $\tilde{x} = [x^T \ \zeta_u^T \ x_c^T \ \zeta_y^T]^T$, we can rewrite Equations (1), (2) and (4) as a DDAE:

$$\begin{aligned} \tilde{E}\dot{\tilde{x}}(t) = \tilde{A}_0\tilde{x}(t) + \tilde{A}_u\tilde{x}(t-\tau_u) + \Sigma_{i=1}^{N}\tilde{A}_i\tilde{x}(t-\tau_i) \\ + \tilde{B}_2 w(t) + \tilde{B}_1\tilde{u}(t) \end{aligned} \tag{5}$$

$$\begin{aligned} z(t) &= \tilde{C}_2\tilde{x}(t) \\ \tilde{y}(t) &= \tilde{C}_1\tilde{x}(t) \end{aligned}$$

coupled with a controller of the form

$$\tilde{u}(t) = K\tilde{y}(t), \tag{6}$$

with ζ_u^T, ζ_y^T denoting slack variables corresponding to the control input and the measured outputs respectively and K can be partitioned as $K = \left[\begin{array}{c|c} A_C & B_C \\ \hline C_C & D_C \end{array}\right]$, $K \in \mathbb{R}^{(n_c+n_u)\times(n_c+n_y\times N)}$. We denote the number of elements of the gain matrix K as n_p, with $n_p = (n_c + n_u) \times (n_c + n_y \times N)$.

Note that the Equation (6) now resembles one of a static output feedback controller. For more details on moving input-output delays to state delays and modelling dynamic feedback in the DDAE framework we refer to Gumussoy and Michiels (2011).

3.2 Assigning a pair of transmission zeros

Suppose that a harmonic disturbance force $f_d = \sum_{i=1}^{m} F_d \cos\omega_i t$ enters into the system remotely. This causes the system to oscillate at the same frequencies. Suppressing vibrations of a single discrete frequency at a target point corresponds to a pair of transmission zeros of the transfer function constructed from the external force to the target mass's position being located on the imaginary axis at the specific excitation frequency. Formally, a transmission zero i.e. $\lambda_z = \pm j\omega$ can be characterized by the solution to:

$$\det\left(\begin{bmatrix} j\omega\tilde{E} - \tilde{A}_0 - \tilde{A}_u e^{-j\omega\tau_u} - \sum_{i=1}^{N}\tilde{A}_i e^{-j\omega\tau_i} - \tilde{B}_1 K \tilde{C}_1 & -\tilde{B} \\ \tilde{C} & 0 \end{bmatrix}\right) = 0. \tag{7}$$

To fully suppress the multi-harmonic disturbances f_d, we constrain the controller parameters such that the closed-loop zeros are located at $\pm j\omega_i,\ i = 1, \ldots, m$.

These constraints can be formalized as follows:

$$h_k(K) = 0, \quad k = 1, \ldots, m \tag{8}$$

with

$$h_k(K) = \begin{vmatrix} j\omega_k\tilde{E} - \tilde{A}_0 - \tilde{A}_u e^{-j\omega_k\tau_u} - \sum_{i=1}^{N}\tilde{A}_i e^{-j\omega_k\tau_i} - \tilde{B}_1 K \tilde{C}_1 & -\tilde{B} \\ \tilde{C} & 0 \end{vmatrix}$$

specifying the zero-location constraints.

3.3 Stability optimization

The characteristic matrix for a time-delay system described by Equations (5) and (6) is given by:

$$M(\lambda; K) = \lambda\tilde{E} - \tilde{A}_0 - \tilde{A}_u e^{-\lambda\tau_u} - \sum_{i=1}^{N}\tilde{A}_i e^{-\lambda\tau_i} - \tilde{B}_1 K^T \tilde{C}_1 \tag{9}$$

The delay in the input, coupled with the added delays to the output feedback leads to an infinite-dimensional system with infinitely many characteristic roots. The spectral abscissa function, in turn can be defined as the supremum of the real parts of the characteristic roots of the closed-loop by:

$$\alpha(K) := \sup\left(\Re(\lambda) : |M(\lambda; K)| = 0\right). \tag{10}$$

Maximizing the stability margin of the overall system corresponds to minimizing the spectral abscissa function. This requirement of minimizing the spectral abscissa function α in the presence of zero-location constraints as defined in (8) can be modelled as an optimization problem of the form:

$$\begin{aligned} \min_{K} \quad & \alpha(K) \\ \text{subject to:} \quad & h_k(K) = 0, \quad k = 1, \ldots, m. \end{aligned} \tag{11}$$

The optimization problem is in general non-smooth and non-convex (Michiels and Niculescu 2007). Additionally, we see that the constraints in Equation (10) are polynomial

in its parameters K. The infinite-dimensionality of the system together with the polynomial constraints make the problem challenging to solve directly using available software.

3.4 Constraint Elimination

We use constraint elimination to solve the ensuing optimization problem. Specifically, we apply the property that the constraint functions h_i are affine in a subset of its controller parameters K. Using this property, we split the gain K into $n_p - 2m$ *independent* parameters and $2m$ *dependent* parameters, where the latter are used to assure constraint satisfaction. The dependent parameters are selected from a single row or a single column of the K to ensure the affinity property. We refer to the procedure described in Saldanha et al. (2022) for details about the choice of dependent and independent parameters.

According to the procedure from Saldanha et al. (2024), we separate the term $\tilde{B}_1 K \tilde{C}_1$ from Equation (8) into its *dependent* and *independent* parts:

$$\tilde{B}_1 K \tilde{C}_1 = \tilde{B}_1 K_L \tilde{C}_1 + \tilde{B}_{11} g^T \tilde{C}_g \tag{12}$$

where $\tilde{B}_{11}$ indicates the input matrix corresponding to one input, g the dependent gains and $\tilde{C}_g$ the output matrix corresponding to the dependent outputs. Here, the vector g represents the dependent variables while K_L is the matrix which consists of the independent parameters to be optimized. The elements of K_L corresponding to the dependent parameters are set to 0 while the rest are free parameters for optimization.

By placing a pair of zeros at $\lambda_k = \pm j\omega_k$ and by applying the Weinstein-Aragozajn identity, we reformulate the constraints from Equation (11) as:

$$1 - g^T \begin{bmatrix} \tilde{C}_g & 0 \end{bmatrix} R(\omega_k, K_L)^{-1} \begin{bmatrix} \tilde{B}_{11} \\ 0 \end{bmatrix} = 0 \tag{13}$$

assuming R is invertible, where

$$R(\omega_k, K_L) = j\omega_k \begin{bmatrix} \tilde{E} & 0 \\ 0 & 0 \end{bmatrix} - \begin{bmatrix} \tilde{A}_0 & \tilde{B} \\ -\tilde{C} & 0 \end{bmatrix} - \begin{bmatrix} \tilde{A}_u & 0 \\ 0 & 0 \end{bmatrix} e^{-j\omega_k \tau_u} - \sum_{i=1}^{N} \begin{bmatrix} \tilde{A}_i & 0 \\ 0 & 0 \end{bmatrix} e^{-j\omega_k \tau_i} - \begin{bmatrix} \tilde{B}_1 K_L^T \tilde{C}_1 e^{-j\omega_k \tau} & 0 \\ 0 & 0 \end{bmatrix}. \tag{14}$$

Hence, we obtain a set of equations of the form:

$$\begin{aligned} \Re\{g^T z(\omega_k, K_L)\} &= 1 \\ \Im\{g^T z(\omega_k, K_L)\} &= 0 \end{aligned} \tag{15}$$

where $z(\omega_k, K_L) = \begin{bmatrix} \tilde{C}_g & 0 \end{bmatrix} R(\omega_k, K_L)^{-1} \begin{bmatrix} \tilde{B}_{11} \\ 0 \end{bmatrix}$. For m pairs of zeros, we get $2m$ separate equations in g as:

$$P(K_L) g = Q \iff g(K_L) = P(K_L)^{-1} Q \tag{16}$$

provided the matrix $P(K_L)$ is invertible.

3.5 Unconstrained optimization problem

With the dependent parameters g eliminated by Equation (15), we obtain an unconstrained optimization problem in K_L:

$$\begin{aligned} \min_{K_L} \quad & \hat{\alpha}(K_L) \\ & \hat{\alpha}(K_L) := \sup\left(\Re(\lambda) : |M_1(\lambda; K_L)| = 0\right) \end{aligned} \tag{17}$$

Table 1. Parameter values

Mass in kg		Stiffness in Nm^{-1}		Damping in Nsm^{-1}	
m_a	0.52	k_a	407	c_a	1.8
m_0	1.1750	k_0	1001	c_0	4.35
m_1	0.5050	k_1	749	c_1	0.85
m_2	0.7290	k_2	711	c_2	1.85
		k_3	950	c_3	4.95
		k_4	377	c_4	0

with

$$M_1(\lambda; K_L) = \lambda \tilde{E} - \tilde{A}_0 - \tilde{A}_u e^{-\lambda \tau_u} - \sum_{i=1}^{N} \tilde{A}_i e^{-\lambda \tau_i} - \tilde{B}_{11} g^T(K_L) \tilde{C}_g - \tilde{B}_1 K_L \tilde{C}_1$$

The optimization problem in Equation (16) is nonsmooth and nonconvex. We utilize the software package `HANSO` (Hybrid solver for nonsmooth optimization) for solving the ensuing problem.

4. CASE STUDY

The controller design is validated by simulation on a minimal spring-mass-damper system, shown in Figure 2. The system consists of four masses m_a, m_0, m_1 and m_2. An external harmonic disturbance $f_d = \sum_{k=1}^{m} F_d \cos \omega_k t$ with $F_d = 3N$ and $\omega_k = 2\pi f_k$, $k = 1, \ldots, 4$, and $f_k = 4, 8, 12, 16$ Hz enters into the system via the mass m_2 which in turn causes the remaining masses to oscillate at the same frequencies. Here the target is m_1 which is not directly accessible, in that it is not possible to place an actuator directly onto this mass and secondly because it is assumed to be impossible to physically measure the position or velocity of this mass. The control effort u is instead supplied by means of a voice-coil actuator located between the masses m_a and m_0. The inherent input-delay tau_u is measured as 1.9 ms. The goal is then to parameterize u to completely annihilate oscillations at the mass m_1. Here we consider feedback measurements of positions and velocities of the masses m_a and m_0 only (highlighted in orange in Figure 2).

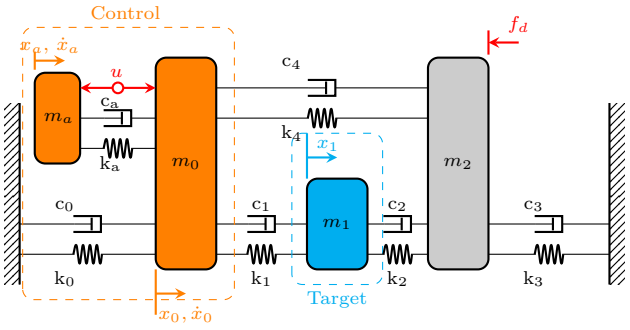

Fig. 2. Spring-mass-damper system model

The parameters of the system are shown in Table 1. We first consider a linear state-space model of the system in the form of Equation (1). Here, the state $x = [x_0 \ \dot{x}_0 \ x_1 \ \dot{x}_1 \ x_2 \ \dot{x}_2 \ x_a \ \dot{x}_a]^T$, system matrix A in Table 4, the measured output $y = [x_0 \ \dot{x}_0 \ x_a \ \dot{x}_a]^T$ with

$$A = \begin{bmatrix} 0 & 1 & 0 & 0 & 0 & 0 & 0 & 0 \\ -\frac{k_0+k_1+k_a+k_4}{m_0} & -\frac{c_0+c_1+c_a+c_4}{m_0} & \frac{k_1}{m_0} & \frac{c_1}{m_0} & \frac{k_4}{m_0} & \frac{c_4}{m_0} & \frac{k_a}{m_0} & \frac{c_a}{m_0} \\ 0 & 0 & 0 & 1 & 0 & 0 & 0 & 0 \\ \frac{k_1}{m_1} & \frac{c_1}{m_1} & -\frac{k_1+k_2}{m_1} & -\frac{c_1+c_2}{m_1} & \frac{k_2}{m_1} & \frac{c_2}{m_1} & 0 & 0 \\ 0 & 0 & 0 & 0 & 0 & 1 & 0 & 0 \\ \frac{k_4}{m_2} & \frac{c_4}{m_2} & \frac{k_2}{m_2} & \frac{c_2}{m_2} & -\frac{k_2+k_3+k_4}{m_2} & -\frac{c_2+c_3+c_4}{m_2} & 0 & 0 \\ 0 & 0 & 0 & 0 & 0 & 0 & 0 & 1 \\ \frac{k_a}{m_a} & \frac{c_a}{m_a} & 0 & 0 & 0 & 0 & -\frac{k_a}{m_a} & -\frac{c_a}{m_a} \end{bmatrix}$$

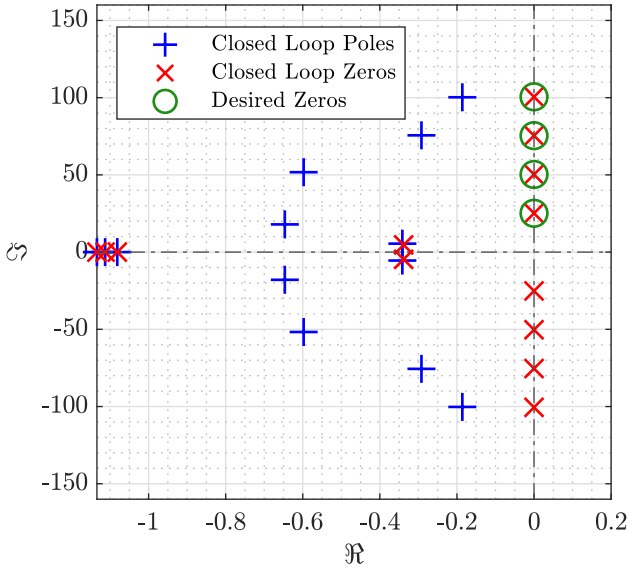

Fig. 3. Pole-zero plot showing the rightmost eigenvalues of the closed-loop system using static controller with 8 delays. After tuning, zeros are desired zeros are assigned correctly and stability margin is sufficient.

$$C_1 = \begin{bmatrix} 1 & 0 & 0 & 0 & 0 & 0 & 0 & 0 \\ 0 & 1 & 0 & 0 & 0 & 0 & 0 & 0 \\ 0 & 0 & 0 & 0 & 0 & 0 & 1 & 0 \\ 0 & 0 & 0 & 0 & 0 & 0 & 0 & 1 \end{bmatrix}$$

and the control output $z = x_1$ with $C_2 = [0\ 0\ 1\ 0\ 0\ 0\ 0\ 0]$. The input matrices corresponding to the control input and the external disturbance are $B_1 = \begin{bmatrix} 0 & -\frac{1}{m_0} & 0 & 0 & 0 & 0 & \frac{1}{m_a} \end{bmatrix}^T$ and $B_2 = \begin{bmatrix} 0 & 0 & 0 & 0 & 0 & \frac{1}{m_2} & 0 & 0 \end{bmatrix}^T$ respectively. The system matrix A is in Table 4.

4.1 Using static output feedback, no delays

With four target frequencies, we would require at least eight free controller parameters, one for each zero. However, by using a simple static feedback controller, we are left with at most four free parameters (corresponding to the four measured outputs), which are insufficient for placing the eight zeros. We can increase the free parameters by adding at least two delays in the feedback, which in turn leads to a total of exactly eight free parameters for placing the eight zeros. This leaves us with no additional free parameters for optimizing the spectral abscissa as per Equation (17).

n_c	n_d	τ	α
0	4	$[0.05\ \ 0.1\ \ 0.15\ \ 0.2]^T$	-0.2782
1	4	$[0.05\ \ 0.1\ \ 0.15\ \ 0.2]^T$	-0.2796
2	4	$[0.05\ \ 0.1\ \ 0.15\ \ 0.2]^T$	-0.2931

Table 2. Closed-loop spectral abscissa for different delays and orders of the controller

4.2 Using static output feedback, with four delays

As per the proposed controller design method, we add four equi-spaced delays in the interval $(0.025, 0.2)$. The delay interval is chosen based on the signal frequencies. The control input is parameterized according to the feedback law in Equations (3) and (4). The addition of the four delays consequently leads to a four-fold increase in free parameters. We proceed to optimize the closed-loop spectrum subject to the prescribed zero-location constraints, using the procedure detailed in Section 3. In the first step, the controller parameters are computed for a zero-order controller (a static one). Next, the controller order is increased by one in successive steps, with the controller parameters initialized with the computed lower-order controller setting. Consequently, the resulting optimum solution achieved with the higher-order controller can be no lower than the optimum computed for the previous lower-order controller.

The results of the optimization are shown in Table 2 (the controller parameters are not shown in the table due to limited space). As per the table, we see that with four delays, we achieve complete closed-loop stability with $\alpha < 0$. By increasing the order of the controller, we can obtain a better result viz. the resulting spectral abscissa is lower.

5. DISCUSSION

We presented a methodology for designing a delayed-dynamic feedback controller for achieving multi-frequency non-collocated vibration suppression. The controller design, by itself is challenging due to intentionally added delays and the dynamic feedback component. However, with the use of DDAEs we systematically remodel the system of equations. With the help of these techniques, we were able to suppress vibrations of a total of four discrete frequencies. The robustness of the approach and the experimental validation are topics for further research.

REFERENCES

Abdallah, C., P. Dorato, J. Benites-Read, and R. Byrne (1993). "Delayed Positive Feedback Can Stabilize Oscillatory Systems". In: *1993 American Control Conference*.

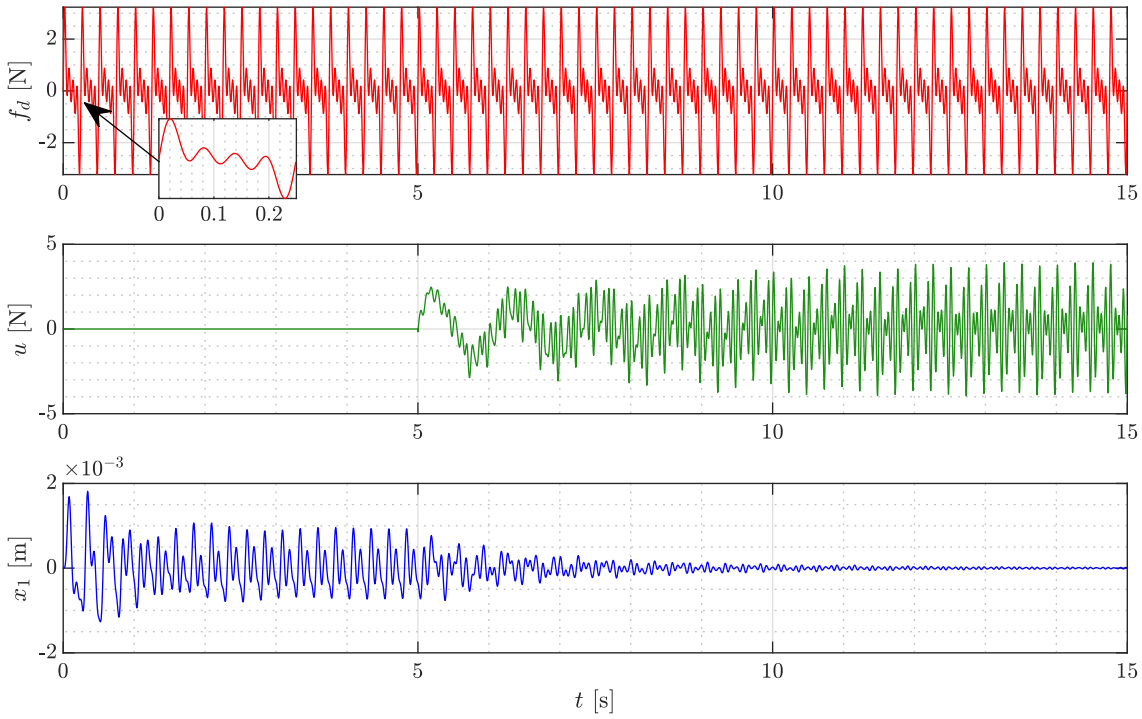

Fig. 4. Multi-harmonic disturbance force $f_d(t)$ (top) acting on mass m_2, controller output $u(t)$ (middle) and displacement $x_1(t)$ of target mass m_1 (bottom). Controller is turned on at time $t = 5$ s, following which, after transient period, the oscillation of target mass is silenced.

1993 American Control Conference. San Francisco, CA, USA: IEEE, pp. 3106–3107.

Buhr, C., M. Franchek, and R. Bernhard (1997). "Non-Collocated Adaptive–Passive Vibration Control". In: *Journal of Sound and Vibration* 206.3, pp. 371–398.

Gumussoy, S. and W. Michiels (2011). "Fixed-Order H-Infinity Control for Interconnected Systems Using Delay Differential Algebraic Equations". In: *SIAM Journal on Control and Optimization* 49.5, pp. 2212–2238.

Jenkins, R. and N. Olgac (2019). "Real-Time Tuning of Delayed Resonator-Based Absorbers for Spectral and Spatial Variations". In: *Journal of Vibration and Acoustics* 141.2, p. 021011.

Michiels, W. and S.-I. Niculescu (2007). *Stability and Stabilization of Time-Delay Systems: An Eigenvalue-Based Approach*. Philadelphia : SIAM.

Niculescu, S.-I. and W. Michiels (2004). "Stabilizing a Chain of Integrators Using Multiple Delays". In: *IEEE Transactions on Automatic Control* 49.5, pp. 802–807.

Olgac, N. and B. Holm-Hansen (1995). "Tunable Active Vibration Absorber: The Delayed Resonator". In: *Journal of Dynamic Systems, Measurement, and Control* 117.4, pp. 513–519.

Olgac, N. and R. Jenkins (2021). "Actively Tuned Non-collocated Vibration Absorption: An Unexplored Venue in Vibration Science and a Benchmark Problem". In: *IEEE Transactions on Control Systems Technology* 29.1, pp. 294–304.

Richiedei, D. and I. Tamellin (2021). "Active Approaches to Vibration Absorption through Antiresonance Assignment: A Comparative Study". In: *Applied Sciences* 11.3, p. 1091.

Richiedei, D., I. Tamellin, and A. Trevisani (2022a). "Pole-Zero Assignment by the Receptance Method: Multi-Input Active Vibration Control". In: *Mechanical Systems and Signal Processing* 172, p. 108976.

– (2022b). "Unit-Rank Output Feedback Control for Antiresonance Assignment in Lightweight Systems". In: *Mechanical Systems and Signal Processing* 164, p. 108250.

Saldanha, A., W. Michiels, M. Kuře, J. Bušek, and T. Vyhlídal (2024). "Stability Optimization of Time-Delay Systems with Zero-Location Constraints Applied to Non-Collocated Vibration Suppression". In: *Mechanical Systems and Signal Processing* 208, p. 110886.

Saldanha, A., W. Michiels, and T. Vyhlídal (2023). "Non-Collocated Vibration Suppression Using Delay-Based Controllers with Multiple Fixed Delays*". In: *IFAC-PapersOnLine* 56.2, pp. 180–185.

Saldanha, A., H. Silm, W. Michiels, and T. Vyhlídal (2022). "An Optimization-Based Algorithm for Simultaneous Shaping of Poles and Zeros for Non-Collocated Vibration Suppression". In: *IFAC-PapersOnLine* 55.16, pp. 394–399.

Silm, H., M. Kuře, J. Bušek, W. Michiels, and T. Vyhlídal (2024). "Spectral Design and Experimental Validation of Noncollocated Vibration Suppression by a Delayed Resonator and Time-Delay Controller". In: *IEEE Transactions on Control Systems Technology* 32.1, pp. 73–85.

Valášek, M., N. Olgac, and Z. Neusser (2019). "Real-Time Tunable Single-Degree of Freedom, Multiple-Frequency

Vibration Absorber". In: *Mechanical Systems and Signal Processing* 133, p. 106244.

Yang, B. and C. D. Mote (1992). "On Time Delay in Noncolocated Control of Flexible Mechanical Systems". In: *Journal of Dynamic Systems, Measurement, and Control* 114.3, pp. 409–415.