ADVANCES ON SCANDIUM RECOVERY BEYOND STATE OF THE ART

By

[1,2]Bengi Yagmurlu, [3]Wenzhong Zhang, [4]Dzenita Avdibegovic, [4]Mercedes Regadío, [3]Risto Koivula, [1]Carsten Dittrich, [4]Koen Binnemans, [2]Bernd Friedrich

[1]MEAB Chemie Technik GmbH, Germany
[2]RWTH Aachen, IME Institute of Process Metallurgy and Metal Recycling, Germany
[3] University of Helsinki, Department of Chemistry, Finland
[4] KU Leuven, Department of Chemistry, Belgium

Presenter and Corresponding Author

Bengi Yagmurlu
bengi@meab-mx.com

ABSTRACT

Scandium (Sc) has attracted a lot of attention in the last decades because of the unique technological applications of this element. It is a key component in solid oxide fuel cells and aluminium alloys, which are especially produced for the aerospace industry. Unfortunately, there exist very few scandium deposits. Thus, scandium is generally recovered from secondary raw materials or by-products from the production of uranium, nickel laterites or titanium dioxide pigment processing.

Recovery of scandium from the leachates has mainly been performed by solvent extraction, ion exchange or a combination of these two techniques. The co-extraction of iron, aluminium and titanium during these hydrometallurgical operations creates problems and extensive purification is required to produce a high-quality product. Therefore, selective and advanced ways to isolate scandium from iron**,** were developed on a laboratory scale.

In highly acidic solutions, scandium can be selectively retained by inorganic metal(IV) phosphate materials via a cation exchange reaction. Amorphous and crystalline layered titanium(IV) and zirconium(IV) phosphates have demonstrated excellent potential for the separation of scandium from bauxite residue leachate. It was found that the selectivity of the inorganic metal phosphates originates from size selection and phosphate coordination. In addition, it was also found that a supported ionic liquid phase (SILP) betainium sulfonyl (trifluoromethanesulfonylimide) poly(styrene-co-divinyl-benzene), prepared by covalent linking of the ionic liquid to the resin, shows an excellent uptake rate of rare-earth elements (REE) from acidic media, in particular of Sc, Y, Nd, Dy. Furthermore, a scandium concentrate can be obtained via successive selective precipitations. The addition of ammonia solution for the removal of iron from the leachate is followed by scandium phosphate precipitation via dibasic phosphates. The purity of the resulting concentrate, containing 20-70% scandium phosphate, depends on the impurity level of the initial solution. The concentrate can be further purified with less effort than by direct processing of the scandium containing solutions.

With the emphasis on scandium recovery in several Horizon2020 EU-funded research projects, i.e. REDMUD, SCALE and REMOVAL, more alternative processes for scandium recovery will become available in the near future.

Keywords: scandium; recovery; secondary resources; hydrometallurgy; bauxite residue

INTRODUCTION

Since there is a direct relation between the weight of the vehicles and their energy consumption in transport applications, the drive to reduce the carbon dioxide emissions puts lightweight metals and alloys under spotlight[1]. One of the promising candidates of light-weight alloys is Al-Sc alloys, where scandium (Sc) is used as a tuning metal[2-4]. While improved strength, thermal resistance and weldability can be achieved in aluminium alloys with minor additions of Sc, enhanced oxygen-ion conductivity can also be attained in solid-oxide fuel cells[5]. Hence, scandium was classified recently as a critical metal, owing to the steep increase in demand, despite its high price[6].

Unfortunately, primary Sc ores can be found scarcely in nature and it is generally recovered from secondary raw materials or by-products of uranium, nickel laterite and titanium pigment processing in general[7].

CLASSICAL METHODS FOR RECOVERING SCANDIUM

The most widely applied and used techniques to recover or purify Sc from secondary raw materials are solvent extraction, ion exchange or the combination of these processes from various aqueous solutions. These processes were investigated deeply at lab scale and used in the processing of Sc. Most of the solutions that are used to recover scandium are from acidic waste solution typically obtained from such as, Ni-laterite processing, Ti-pigment production or bauxite residue (BR) processing.

Solvent Extraction Methods

Among all the other techniques, solvent extraction has the advantages of processing higher capacity and operational ease at larger scale with lower operational costs, which makes this the most widely used technique to recover trace amount scandium from various processing wastes. For this purpose, mostly both acidic and neutral organaphosphorous extractants were investigated and good results were obtained for Sc extraction from various media.

Di-(2-ethylhexyl) phosphoric acid which is also abbreviated as DEHPA, is one of the most promising, widely investigated and used extractant. Three main mineral acid media, H_2SO_4, HNO_3 and HCl, were tested and it showed good performance on Sc extraction in all cases[8,9]. Almost complete extraction was reached in those investigations. For instance, it was shown that 99% of Sc was extracted in all cases from aqueous solutions with different acidities, with quantitative co-extraction of the other major impurities[8]. Another study which aimed to recover scandium from scraps of magnesium, aluminium and iron showed that complete Sc recovery can be reached from the leach solutions with almost 10% co-extraction of Fe[10]. DEHPA also showed the greatest extraction performance from red mud solutions among different compared reagents which then concluded with a process proposal including the stripping step via NaOH[11]. Among all of these advantages, there are also some disadvantages such as, the stripping and co-extraction problems as well as the formation of an emulsion.

Another widely investigated reagent for Sc recovery is 2-ethyhexyl phosphonic acid mono-2-ethylhexyl ester, known as Ionquest 801 or P507. While this reagent offers poorer Sc extraction than DEHPA, it makes the stripping operation easier as it needs less acidic stripping solutions. Nevertheless, the stripping operations still have problems. The extraction behaviour of the elements in the aqueous solutions showed similarities with DEHPA[12].

Other acidic reagents like Cyanex 272 or Cyanex 302 were also tested for the purpose of recovering Sc from waste streams. Although Sc extraction yield is worse than DEHPA or Ionquest 801, stripping is much easier. It was shown in a comparative study that, Cyanex 272 had lower extraction yield than DEHPA or Ionquest 801, however it showed 90-95% Sc stripping efficiency while it was difficult to strip from DEHPA and Ionquest with H_2SO_4[13,14].

Neutral phosphate based extractants are also another choice for certain cases. Tri-butyl phosphate (TBP) is one of the most popular reagents in this class. While TBP has a low Sc extraction in general, in aqueous solutions containing high concentration of HCl (6-8 M), complete Sc extraction was achieved[15]. Another candidate for Sc removal from high acidity solutions (2-7 M H_2SO_4) such as TiO_2 production waste streams is Cyanex 923, a trialkyl phosphine oxide. It showed better separation of Sc from Fe and Ti from highly acidic solutions and an increase in Sc extraction was observed with increasing acidity[16].

Ion Exchange Methods

Ion exchange methods have also been studied for the recovery of Sc from different types of feed solutions[17,18]. Some of the problems faced during solvent extraction methods i.e. need of multiple stages of all operation steps especially for trace amount element recoveries, loss of extractant during operation and formation of emulsions can be solved using ion-exchange resins. Although this method offers some advantages over solvent extraction, it also has disadvantages which limit its usage. For instance, slow exchange rate which makes the process time-consuming, increases the operating costs as well as making it less efficient for highly impure solution treatment. Since, the effectiveness of resin is decreased significantly when it is used for highly impure solutions, these resins are not the optimum material choice to recover Sc from highly impure feeds. In addition, ion exchange resins are relatively expensive to use in trace Sc recovery operations.

Liquid neutral organophosphorus and alkyl phosphoric acid compounds are the most commonly investigated extractants in impregnated resins[19,20]. Sc was selectively extracted over Fe and Mn by DEHPA impregnated resin (Lewatit VP OC 1026) [21]. Another example of selective Sc recovery from leached wolframite and tin slags was achieved with a Ionquest 801 impregnated resin with Amberlite XAD-7 beads[22]. Since these impregnated resins are suitable for direct extraction from ore pulps, more applications might be developed.

Current Trends and Operations for Scandium Recovery

Scandium from Bauxite Residue

Bauxite residue (i.e. red mud) is the stockpiled by-product obtained throughout the Bayer Process, having approximately four billion tones with a previously reported a 160 million tones annual production. This alkaline waste can be considered as a valuable resource because of its metal content (Fe, Al, Ti, Sc, REEs, etc.). Therefore, complete or partial valorization of red mud has been, and remains, of great interest.

Some processes have already been applied at industrial scale to recover Sc from bauxite residue. Two different examples of these processes can be seen from Figure 1. Figure 1a shows the proposed operation by ORBITE Technologies Inc. to recover valuable elements from bauxite residue. The proposed process is initiated by leaching of bauxite residue with HCl, then $AlCl_3$ crystallization with the introduction of excess HCl which is finally followed by impurity removal and Sc and REEs recovery. The process proposed and applied by RUSAL can be seen in Figure 1b. According to this operation, bauxite residue is first leached with carbonates, then is followed by hydrolysis steps to obtain Sc concentrate which is then further purified.

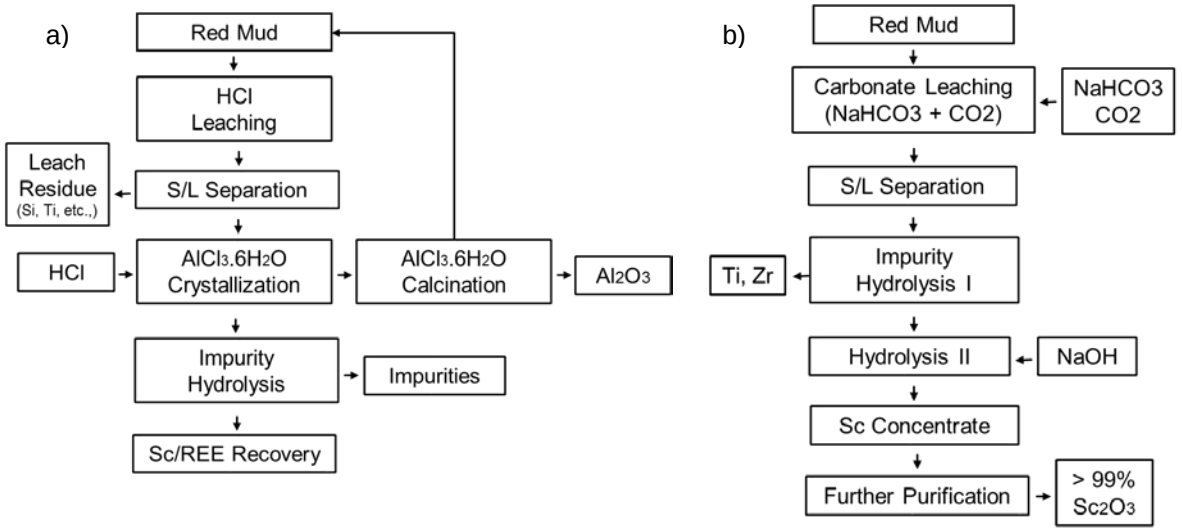

Figure 1. Scandium recovery operations from bauxite residue proposed by a) ORBITE Aluminum, b) RUSAL

Scandium from Nickel Laterites

Another important secondary resource of Sc is Ni-laterite ores. A typical Ni-laterite ore contains 1-2% Ni, 0.05-0.1% Co, 15-50% Fe, 2-5% Al and trace amount of Sc. This trace amount of Sc can be recovered as a by-product during Ni and Co extraction operations since Sc is leached out more than 90% during the high pressure acid leaching process with sulfuric acid[13,23].

Two different processes were proposed to process Ni-laterites to recover Sc. The first one, which is obtained by Ni-Co Sulfide precipitation (MSP), follows the route of sulfide precipitation with the introduction of H_2S to remove Ni and Co from the PLS. Then, the remaining solution can be processed either by precipitation, solvent extraction or ion exchange methods to recover Sc. The flow diagram of this method can be seen from Figure 2a.

The second way to recover Sc from Ni-laterite solutions is by precipitation of Sc as hydroxide along with some impurities before primary Ni-Co precipitation as hydroxide (MHP). The precipitate which contains Sc, can be further processed by re-leaching and removing impurities from Sc by solvent extraction or ion exchange as well.

There are some industrial examples using these methods to produce Sc_2O_3 or ScF_3 from Ni-laterite feeds. For instance, Sumitomo Metal Mining Co. proved the successful recovery of Sc from their MSP HPAL plants in Philippines with pilot plant tests in 2013. It is expected to start Sc production in industrial scale in 2018 with the capacity of 7.5 tonnes/year Sc_2O_3. Another example to recover Sc from Ni-laterite ores is from the MHP HPAL plants in Turkey by META Nickel Cobalt Inc. In this operation, concentrated Sc precipitate is processed and synthesis of both ScF_3 and Sc_2O_3 was successful and patented.

In Australia, industrialised plants for Sc recovery from Ni-laterites are under development by several mining companies and expected to produce Sc_2O_3 in large amounts. For instance, a hydrometallurgy plant was designed to produce 28 tonnes of Sc_2O_3 per year from the Nyngan Project. Moreover, CleanTeq designed an innovative Resin-in-Pulp Process (Clean-iX) to produce Sc as a by-product of Ni-Co production[24].

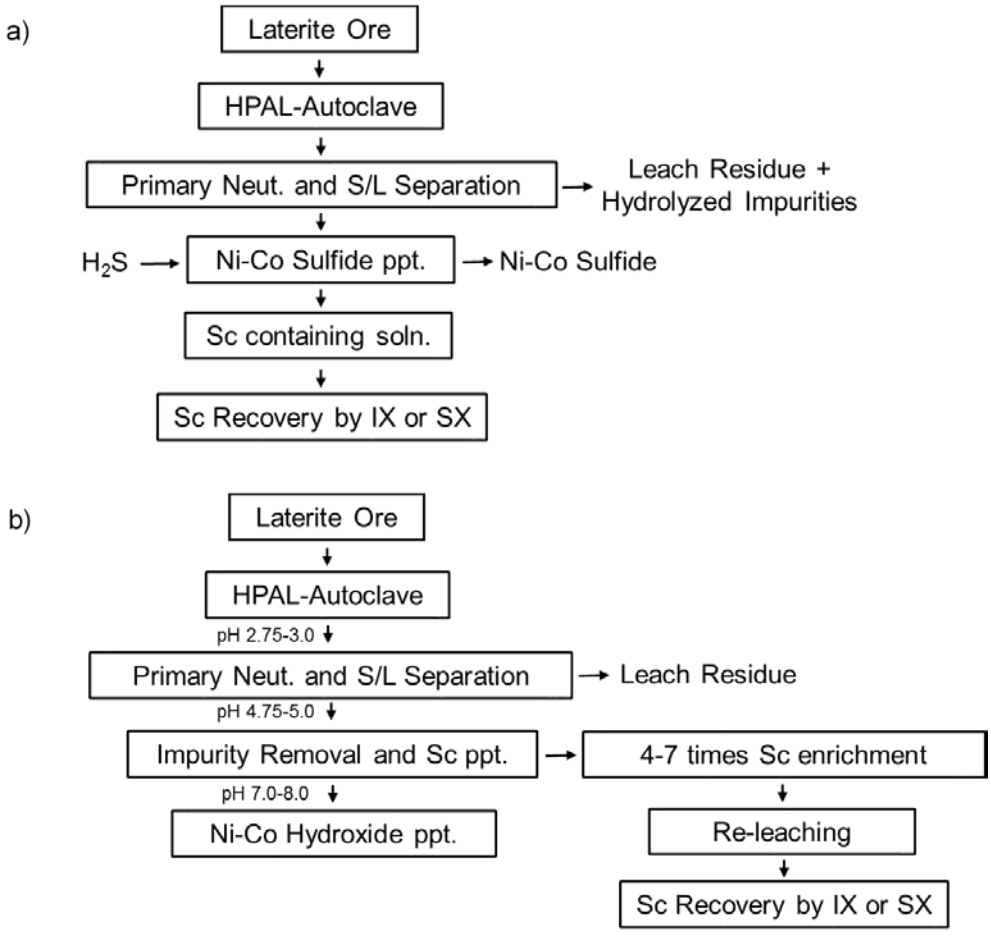

Figure 2. Scandium recovery from Ni-laterites by a) MSP and b) MHP method

CURRENT INNOVATIONS ON SCANDIUM RECOVERY

Successive Selective Precipitation

All recovery processes to recover trace elements from highly impure aqueous solutions need intense purification steps or usage of advanced and expensive reagents due to co-extraction of impurity elements[25]. In the case of Sc, as it was mentioned before, impurity elements are also extracted with Sc both in SX and IX processes. Therefore reaching high purity Sc is an expensive and multi-stage operation.

The major problem of the scandium recovery by precipitation from a multicomponent solution is the co-precipitation with ions present in the system, especially Fe. Since Fe interferes Sc in every extraction and purification operation, removal of this problematic ion beforehand makes all further processes much easier.

In our previous studies, a simple triple-staged precipitation procedure has proven to have great potential to recover Sc from Sc containing aqueous solutions. This process showed that, the majority of Fe can be removed from the solution with dual step precipitation by $NH_{3(aq)}$ addition with negligible Sc loss[26,27]. A possible reason for low Sc co-precipitation as Fe is almost completely precipitated is because of the occurrence of scandium hexammine complex upon addition of ammonia to the system which can inhibit the interaction between Fe and Sc and prevent co-precipitation in the system. Addition of $NH_{3(aq)}$ to remove Fe in the system performed similarly in all three mineral acid media. Hence, this precipitation process can be applied to major acidic waste streams. In addition, there is a strong affinity of Sc, Fe and REEs towards PO_4^{3-} ion, which can be used to trigger selective Sc precipitation.

Considering the behaviour of the major impurities of bauxite residue leachates, triple-staged precipitation processes to synthesize a scandium concentrate can be proposed for the possible mineral acid systems. After removing more than 95% of Fe using $NH_{3(aq)}$ with low Sc loss in the first two-stage Fe-removal operation, a phosphate precipitation step is applied as the 3rd part of this successive precipitation process. The process flow diagram can be seen in Figure 3. As a result, Sc concentrate containing 15-50% $ScPO_4$ having Al as the major impurity was produced according to the initial impurity level.

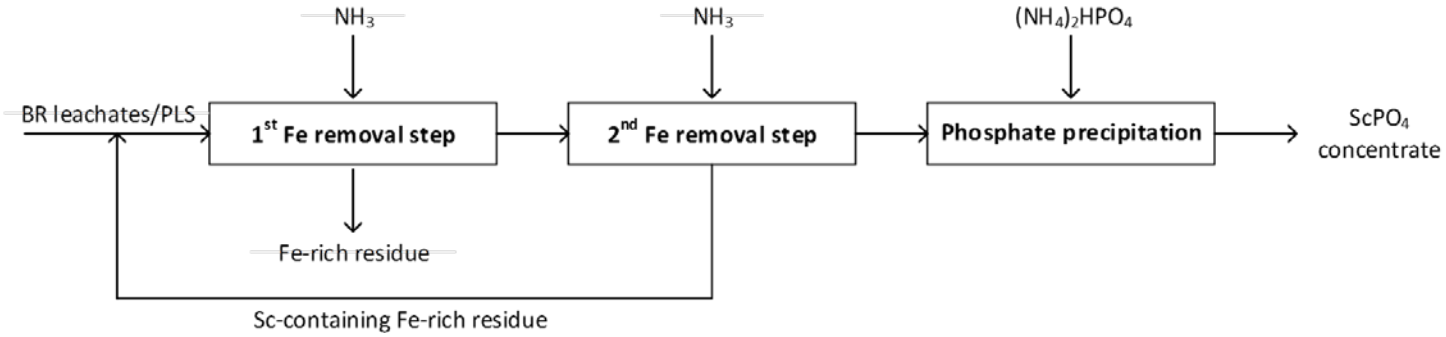

Figure 3. Successive Selective Precipitation Route to Recover Sc from Bauxite Residue Leachates[27]

Inorganic Metal(IV) Phosphate Ion Exchangers

Group 4 metal phosphates are a class of acid-resistant insoluble phosphate salts that have been developed by Clearfield[28] and Alberti[29] since 1960s. They are essentially built up by MO_4 and PO_4 tetrahedra into an amorphous or ordered framework structure, which can be tuned by controlling the synthesis conditions. The possession of hydrogenphosphate groups ($–HPO_4$ and $–H_2PO_4$) grants these material cation exchange capabilities. The acidic stability and metal ion exchange capability are vital for hydrometallurgical applications involving pregnant leaching solution prepared from mineral acids.

Among the metal(IV) phosphate materials, zirconium(IV) and titanium(IV) phosphates have been studied the most. The metal ion affinity towards the ion-exchangers are governed by three fundamental factors: ionic potential (charge), steric hindrance (ion-sieve) and phosphate coordination.

In general, the metal(IV) phosphate materials prefer metal ions with higher valence. The steric hindrance effect can be tuned by employing metal(IV) phosphate materials with different framework structures. Although these materials have a history of more than 50 years, the separation of rare-earth elements (including Sc^{3+}) has not been systematically studied until recently.

Usually, an industrial leachate effluent contains significant amounts of Al^{3+}, Fe^{3+}, Ti^{4+}, Si^{4+}, Na^{+}, Ca^{2+} (in g/L or sub-g/L scale) with very diluted Sc^{3+} (several mg/L). Tetravalent ions (Ti^{4+}, Si^{4+} and Zr^{4+}) are prone to hydrolysis, therefore a precipitation pre-treatment step is used to eliminate those components. Divalent and monovalent ions (Ca^{2+}, Na^{+}, K^{+}, et al) do not compete with trivalent Sc^{3+} and rare-earth ions. Therefore, the major interference relating to Sc^{3+} recovery is the presence of trivalent Fe^{3+} and Al^{3+} in the leachate.

We have shown that inorganic titanium(IV) phosphates are especially selective for trace Sc^{3+} recovery from bauxite residue leachate[30]. The high Sc^{3+} selectivity of amorphous titanium(IV) phosphate was due to the matching of Ti^{4+} lattice radius with Sc^{3+}ionic radius (both 0.745 Å). Interference with Fe^{3+} was partially resolved by on-column reduction to Fe^{2+}. Based on the composition of the leachate, further modification of the ion-exchange materials could result in a reasonable separation process, harvesting trace amount of Sc^{3+} from the acid leachate.

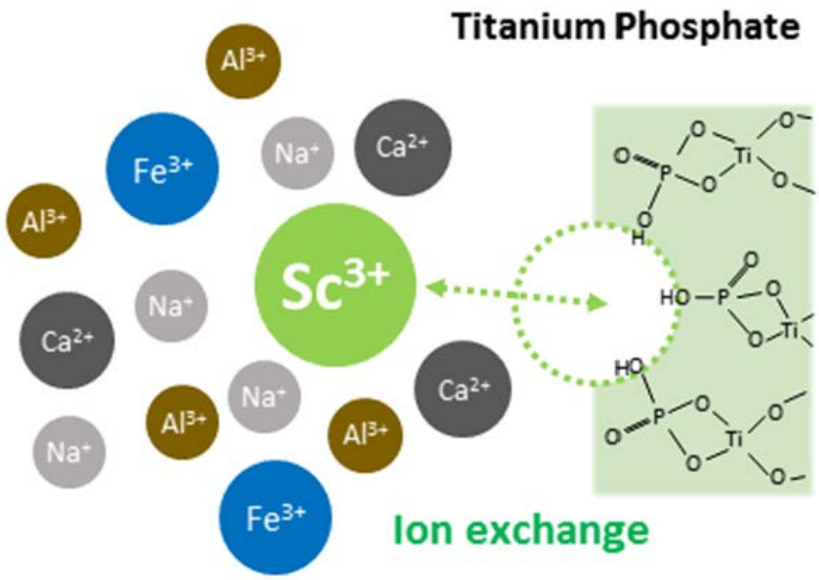

Figure 4. Inorganic Metal Phosphate Ion Exchange Mechanism[30]

Ionic liquids (ILs) show a great potential for application in hydrometallurgy, both solvent extraction and leaching. ILs are solvents that consist entirely of ions, and they have been investigated as non-volatile alternatives to organic solvents[31,32]. However, ILs have a high viscosity which may involve drawbacks in process design. To overcome these issues different methods are used to immobilize ILs onto the surface of a solid support forming supported ionic liquid phases (SILPs).

Acidic BR leachates typically comprise much higher concentrations of base elements (g L^{-1}) than those of the REEs (mg L^{-1}). Thus, adsorbents that are highly selective for the REEs over the base elements are required for the separation. A novel SILP betainium sulfonyl(trifluoromethanesulfonylimide) poly(styrene-co-divinylbenzene) [Hbet-STFSI-PS-DVB] was prepared and evaluated for the uptake of REEs (Sc, Y, Nd, Dy) in the presence of base elements (Ca, Al, Fe) from bauxite residue HNO_3 leachate[31]. The SILP exhibited a superior affinity for REEs over the base elements in HNO_3 BR leachates, with recovery rates for the REEs of 71.7–100%. Furthermore, the REEs were purified from the base elements in a single chromatography separation comprising H_3PO_4 and HNO_3 as eluting agents. The REEs were separated into three sub-groups (scandium, light REEs and heavy REEs). The elution followed the sequence: Sc(III) > Fe(III) > Ca(II) > Al(III) > Dy(III) ≈ Y(III) > Nd(III). Fast adsorption kinetics indicated a potential applicability of the SILP to a large-scale process. The purification and enrichment of the REEs over the base elements were performed without requiring complexing agents or a pre-treatment for the removal of interfering elements.

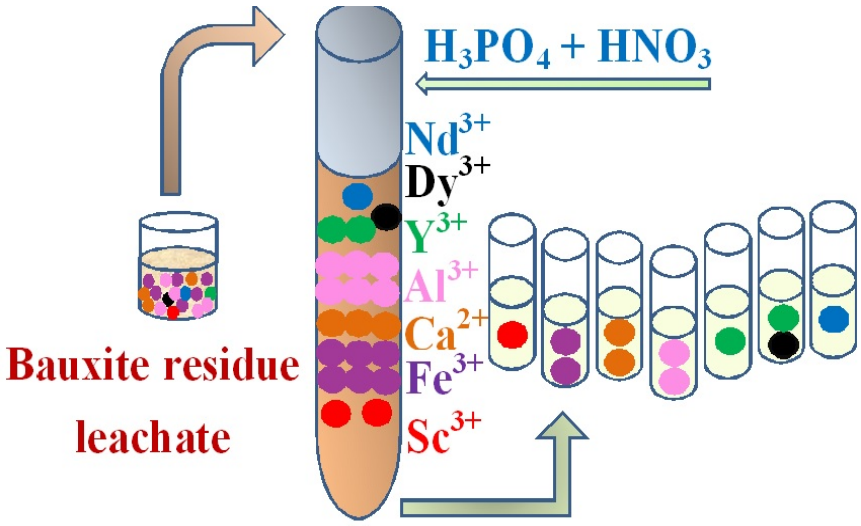

Figure 5. Mechanism of Sc recovery by Supported Ionic Liquid Phases[31]

CONCLUSIONS

During this decade, lots of attention was given to recover Sc from secondary raw materials with the latest technological developments on Sc and its applications. While the main traditional extraction and production methods for Sc consist of solvent extraction, ion exchange or the combination of both of these processes, newly developed methods offer some advantages over these operations. Although these processes still under laboratory scale investigation, with the increase in demand and focus on Sc, it is expected that they will develop further and even combine these processes to develop more advanced techniques.

With the emphasis on scandium recovery in several Horizon2020 EU-funded research projects, i.e. REDMUD, SCALE and REMOVAL, more alternative processes for scandium recovery are expected to become available in the near future.

ACKNOWLEDGEMENTS

The research leading to these results has received funding from the European Community's Horizon 2020 Programme ([H2020/2014–2019]) under Grant Agreement no. 636876 (MSCA-ETN REDMUD). This publication reflects only the author's view, exempting the Community from any liability. Project website: http://www.etn.redmud.org.

REFERENCES

1 UNFCCC. Adoption of the Paris Agreement, Report No. FCCC/CP/2015/L.9/Rev.1. (http://unfccc.int/resource/docs/2015/cop21/eng/l09r01.pdf, 2015).

2 Lathabai, S. & Lloyd, P. The effect of scandium on the microstructure, mechanical properties and weldability of a cast Al–Mg alloy. *Acta Materialia* **50**, 4275-4292 (2002).

3 Lee, S. *et al.* Influence of scandium and zirconium on grain stability and superplastic ductilities in ultrafine-grained Al–Mg alloys. *Acta Materialia* **50**, 553-564 (2002).

4 Røyset, J. & Ryum, N. Scandium in aluminium alloys. *International Materials Reviews* **50**, 19-44 (2005).

5 Ormerod, R. M. Solid oxide fuel cells. *Chemical Society Reviews* **32**, 17-28 (2003).

6 Gambogi, J. USGS Minerals Information: Scandium. 146-147 (U.S. Geological Survey, 2017).

7 Feuling, R. J. (Google Patents, 1991).

8 Qureshi, I., McClendon, L. & LAFLEUR, F. Extraction Studies of the Group III B-VII B Elements and the Lanthanides Utilizing Bis (2-Ethyl-Hexyl) Orthophosphoric Acid. *Radiochimica Acta* **12**, 107-111 (1969).

9 Singh, R. K. & Dhadke, P. M. Extraction and separation of scandium (III) from perchlorate media, by D2EHPA and PC-88A. *Bull Chem Technol Macedonia* **22**, 1-11 (2003).

10 Ditze, A. & Kongolo, K. Recovery of scandium from magnesium, aluminium and iron scrap. *Hydrometallurgy* **44**, 179-184 (1997).

11 Wang, W., Pranolo, Y. & Cheng, C. Y. Recovery of scandium from synthetic red mud leach solutions by solvent extraction with D2EHPA. *Separation and Purification Technology* **108**, 96-102 (2013).

12 Xue, L. & Li, D. Extraction of scandium (III), yttrium (III), lanthanide (III) and iron (III) from hydrochloric acid solutions with di-(2-ethylhexyl) phosphinic acid. *Chin. J. Appl. Chem* **9**, 21-25 (1992).

13 Haslam, M. in *Proceeding of ALTA 1999 Nickel/Cobalt Pressure Leaching & Hydrometallurgy Forum.* (ALTA Metallurgical Services).

14 Wang, W. & Cheng, C. Y. Separation and purification of scandium by solvent extraction and related technologies: a review. *Journal of Chemical Technology and Biotechnology* **86**, 1237-1246 (2011).

15 Peppard, D., Mason, G. & Maier, J. Interrelationships in the solvent extraction behaviour of scandium, thorium, and zirconium in certain tributyl phosphate-mineral acid systems. *Journal of Inorganic and Nuclear Chemistry* **3**, 215-228 (1956).

16 Li, D. & Wang, C. Solvent extraction of scandium (III) by Cyanex 923 and Cyanex 925. *Hydrometallurgy* **48**, 301-312 (1998).

17 Sigmund, J. (Google Patents, 1959).

18 Hamaguchi, H., Kuroda, R., Aoki, K., Sugisita, R. & Onuma, N. Cation-exchange separation of scandium. *Talanta* **10**, 153-162 (1963).

19 Korovin, V. & Shestak, Y. Scandium extraction from hydrochloric acid media by Levextrel-type resins containing di-isooctyl methyl phosphonate. *Hydrometallurgy* **95**, 346-349 (2009).

20 Korovin, V., Shestak, Y. & Pogorelov, Y. Scandium extraction by neutral organo-phosphorus compounds supported on a porous carrier. *Hydrometallurgy* **52**, 1-8 (1999).

21 Kim, T. K. & McClintic, R. P. Process for recovering scandium from waste material, US Patents 4751061 (1988).

22 Wakui, Y., Matsunaga, H. & Suzuki, T. M. Selective recovery of trace scandium from acid aqueous solution with (2-ethylhexyl hydrogen 2-ethylhexylphosphonate)-impregnated resin. *Analytical sciences* **5**, 189-193 (1989).

23 Wang, W., Pranolo, Y. & Cheng, C. Y. Metallurgical processes for scandium recovery from various resources: A review. *Hydrometallurgy* **108**, 100-108 (2011).

24 Ricketts, N. & Duyvesteyn W. The Current Status of Scandium Supply Projects and Their Technical Challenges in ALTA 2017.

25 Alkan, G. *et al.* Novel Approach for Enhanced Scandium and Titanium Leaching Efficiency from Bauxite Residue with Suppressed Silica Gel Formation. *Scientific Reports* **8**, 5676, doi:10.1038/s41598-018-24077-9 (2018).

26 Yagmurlu, B. *et al.* in *ICSOBA 2017.*

27 Yagmurlu, B., Dittrich, C. & Friedrich, B. Precipitation Trends of Scandium in Synthetic Red Mud Solutions with Different Precipitation Agents. *Journal of Sustainable Metallurgy* **3**, 90-98 (2017).

28 Clearfield, A. Recent advances in metal phosphonate chemistry. *Current Opinion in Solid State and Materials Science* **1**, 268-278 (1996).

29 Alberti, G., Casciola, M., Costantino, U. & Vivani, R. Layered and pillared metal (IV) phosphates and phosphonates. *Advanced Materials* **8**, 291-303 (1996).

30 Zhang, W. *et al.* Efficient and selective recovery of trace scandium by inorganic titanium phosphate ion-exchangers from leachates of waste bauxite residue. *ACS Sustainable Chemistry & Engineering* **5**, 3103-3114 (2017).

31 Avdibegović, D., Regadío, M. & Binnemans, K. Recovery of scandium (III) from diluted aqueous solutions by a supported ionic liquid phase (SILP). *RSC Advances* **7**, 49664-49674 (2017).

32 Onghena, B., Borra, C. R., Van Gerven, T. & Binnemans, K. Recovery of scandium from sulfation-roasted leachates of bauxite residue by solvent extraction with the ionic liquid betainium bis (trifluoromethylsulfonyl) imide. *Separation and Purification Technology* **176**, 208-219 (2017).

View publication stats