Downloaded from http://journals.lww.com/ijmr by BhDMf5ePHKav1zEoum1tQfN4a+kJLhEZgbsIHo4XMi0hCywCX1AWnYQp/IlQrHD3i3D0OdRyi7TvSFl4Cf3VC1y0abggQZXdgGj2MwlZLeI= on 02/25/2022

DOI: 10.4103/0971-5916.307699

Quick Response Code:

Authors' response

At the outset, the authors[1] would like to thank Dr Sinha for her suggestions and critical review of our paper[2]. The detailed analytical justification of the model was not included in the paper as its intent was to highlight some of the predictions of the model. Most of the critical comments are possibly due to inadequate clarification by the authors, regarding the rationale of certain assumptions made while developing the model.

The authors provide the following clarifications for some of the observations made in the letter:

(*i*) The phrase 'supermodel from India' was used by the Department of Science and Technology (DST) when constituting the committee and appointing the members to develop the model, and not coined by the authors.

(*ii*) The statement that the authors must be aware of the earlier models proposed for modelling COVID-19, where presence of asymptomatic infected have been explicitly considered and therefore, not new is acknowledged by the authors. In fact, reference 28 of our paper[1] is about the pioneering paper by Robinson and Stilianakis[3] where the SAIR model is proposed.

(*iii*) Dr Sinha also suggests that the datasets used for the model are of heterogenous nature and therefore reliability is highly variable[2]. This statement would apply to every country and to every modelling exercise however, the inherent unreliability of pandemic data need not be an excuse to avoid undertaking the exercise of developing a model all together.

(*iv*) The specific objections and questions enumerated para wise in the letter are addressed below:

1. It is stated that the model can easily be reduced to two parallel SIR (S_L-A-R_A and S_H-I-R I) models[2]. We are aware of this shortcoming and have developed a method for calibrating the Robinson and Tsilianakis SAIR model to real data (the first ones to do so). However, the delta parameter in that model is overly sensitive to data, and thus the traditional SAIR model does not lend itself to making accurate future projections. Moreover, the model proposed by us gave an accurate projection for >90 days since the time it was published. We might add that to the best of our knowledge, we are not aware of any other Indian model for this pandemic with similar accuracy. We are developing yet another model that does not suffer from the shortcoming pointed out by Dr Sinha, and yet seems capable of producing accurate predictions. We propose to report the same soon. In contrast to the delta parameter of the SAIR model, the epsilon parameter in the proposed model can be estimated in a robust model. There is always scope for fine tuning and improving the process of modelling.
2. It is pointed out that equations (1) and (2) are structurally the same. If S_H (0)=0.499 (say), S_L (0)=0.500, and I=0.001, then both the subgroups of S evolve exactly in the

same manner, and essentially follow the same trajectory. This is essentially the same comment as explained at para 1 above, it will be better addressed in the proposed subsequent model under process.

3. It is mentioned that given the rapidly evolving behaviour of SARS-CoV-2 (including changes in the types and mutations in the genome sequences in India) and the increasing experimental literature on reinfection and/or relapse cases, it will be pertinent to consider a SIRS (or variations thereof) model as part of the so-called Supermodel for future relevance[2]. We have been following the rapidly evolving behaviour of SARS-CoV-2 closely[4,5]. There are no noteworthy mutations so far as per experts (more than 99% commonality in the coding regions of the virus). If the need arises, we will include a relapse from R back to S in our model.
4. The comment that asymptomatic has not been defined clearly, even though inclusion of asymptomatic (A) is what makes this model 'new' has already been answered above. We have not claimed that the inclusion of A is new.
5. The number ε is the ratio S_I(0)/S(0). Therefore S_I(0)/S_A(0)=ε/(1 – ε) which is approximately equal to ε. There is no error, nor is there any benefit of unnecessarily complicated formulae that can be easily simplified. The author states that the only reason for changing epsilon, with no apparent scientific basis in the same population, seems to fit the data. This comment is not understood since the idea of changing any model parameter or equation is to fit and explain the data logically. In addition, we do explain the method of estimating epsilon.
6. It is explained in the paper that the epidemiological parameters change with time, mainly due to changes in the contact parameter beta. Thus, when the previous estimates no longer match ground-level data, a new phase is initiated based on changing in interactions and hence the duration of phases cannot be the same.
7. The eta parameter captures deaths and does not interfere with the gamma parameter.
8. Answered at para 7 already.
9. For multi-compartmental models, the simple beta/gamma formula for R_0 can be replaced by a more elaborate formula involving the spectral radius of the next generation matrix. This is well-studied in mathematical epidemiology. However, with the simplifying assumptions made, the R_0 reduces to beta/gamma. We do not see any benefit in using the effective R.
10. We agree that a wire diagram should have been included. The same is being added as a Figure here.
11. This observation mentions a few phenomena in non-linear analysis, and adds that it is unclear whether this property is true with the proposed model. We would like to point out that one of the authors has been working on non-linear dynamics for many decades now. The situation that Dr Sinha has hypothesized does not occur with any of the various classes of SEIR, SAIR, or other models, including the one proposed by us. There are no basin boundaries nor is there chaotic behaviour. The set of equilibria is globally attractive. This is further exemplified at Theorems 6, 7, and 8 of reference 27[1] in our article[6].
12. Comments at points 2 and 13 are simply opinions and do not call for any response from us.

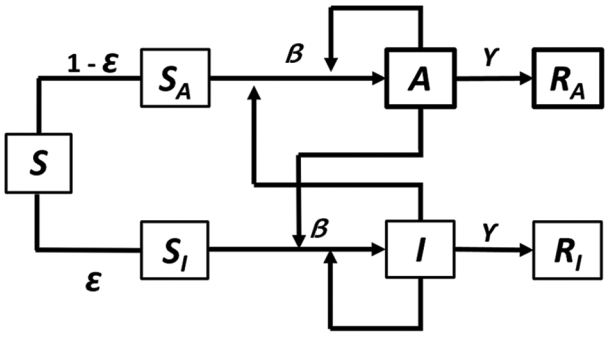

Figure. Flowchart for population in the SAIR model. S, susceptible; S_A susceptible and asymptomatic; A, asymptomatic; I, infected; S_I, susceptible and infected; R_A, recovered among asymptomatic; R_I, recovered among infected.

(*v*) We believe that our model is biologically relevant and mathematically correct. So long as our model continues to fit not only past but also future data or a better model can be developed, we feel our model explains the pandemic in a simple and replicable way.

Manindra Agrawal[1], Madhuri Kanitkar[3,*] & M. Vidyasagar[2]

[1]Department of Computer Science & Engineering, Indian Institute of Technology Kanpur, Kanpur 208 016, Uttar Pradesh, [2]Department of Artificial Intelligence, Indian Institute of Technology Hyderabad, Hyderabad 502 285, Telangana & [3]Deputy Chief Integrated Defence Staff (Medical), HQ Integrated Defence Staff, Ministry of Defence, Government of India, New Delhi 110 010, India
mkanitkar15@gmail.com

References

1. Agrawal M, Kanitkar M, Vidyasagar M. Modelling the spread of SARS-CoV-2 pandemic - Impact of lockdowns & interventions. *Indian J Med Res* 2020. doi: 10.4103/ijmr.IJMR_4051_20.
2. Sinha S. Modelling the spread of SARS-CoV-2 pandemic - Is this even close to a supermodel? *Indian J Med Res* 2020; *52*.
3. Robinson M, Stilianakis NI. A model for the emergence of drug resistance in the presence of asymptomatic infections. *Math Biosci* 2013; *243* : 163-77.
4. Ortiz-Prado E, Simbaña-Rivera K, Gómez-Barreno L, Rubio-Neira M, Guaman LP, Kyriakidis NC, *et al*. Clinical, molecular, and epidemiological characterization of the SARS-CoV-2 virus and the coronavirus Disease 2019 (COVID-19), a comprehensive literature review. *Diagn Microbiol Infect Dis* 2020; *98* : 115094.
5. Ghaebi M, Osali A, Valizadeh H, Roshangar L, Ahmadi M. Vaccine development and therapeutic design for 2019-nCoV/SARS-CoV-2: Challenges and chances. *J Cell Physiol* 2020; *235* : 9098-109.
6. Asnumali S, Kaushal S, Kumar A, Prakash M, Vidyasagar M. Modelling a pandemic with asymptomatic patients, impact of lockdown and herd immunity, with applications to COVID-19. *Annu Rev Control* 2020; *50* : 432-47.