Composition of reactive coordinated execution for IEC 62264 work centers and work units: best practices for traceability and stability

María I. Artigas, Rômulo Teixeira Rodrigues, Herman Bruyninckx

MPro

Adaptive and smart assembly systems and cells

Goal

Propose a set of **best practices** for the design of execution systems for **coordinated multi-robot** and multi-activity applications, with a focus on traceability by introducing strong resource dependency structures.

Motivation

Developers of manufacturing execution systems:

- Deal with highly *connected* processes
- *Diversity* of processes to be tracked continuously
- *Online disturbances* while manufacturing process
- *Synchronization* of resources needed for *coordinated* executions

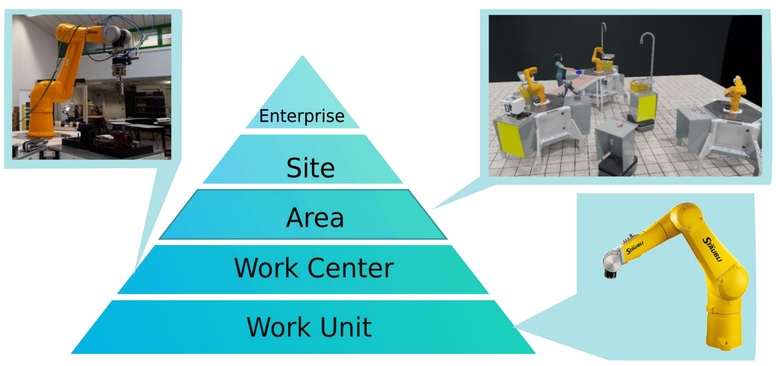

Introduction of three patterns to:

- Loosen the coupling between resources and pre-planned schedules in shared areas
- Coupling only at runtime reacting
  - to the current state of execution
  - to the disturbances in the current situation

Further reading

• Artigas, M. I., Rodrigues, R. T., Decré, W., & Bruyninckx, H. (2023, August). Composition of Reactive Coordinated Execution for IEC 62264 Work Centers and Work Units: Best Practices for Traceability and Stability. In *2023 IEEE 19th International Conference on Automation Science and Engineering (CASE)* (pp. 1-8). IEEE.

Approach

Set of coordination primitives

Petri nets

- Only **coordination** dependencies in the execution
- Explicit protocol of **ownership**
  - Source places: incoming events
  - Sink places: outgoing events
  - Internal places

Finite State Machines

- State of practice for discrete task execution of **one activity** or **robot**

Shared flag buffers

- Exchange of information **among activities** or robots
- Explicit protocol of **ownership**

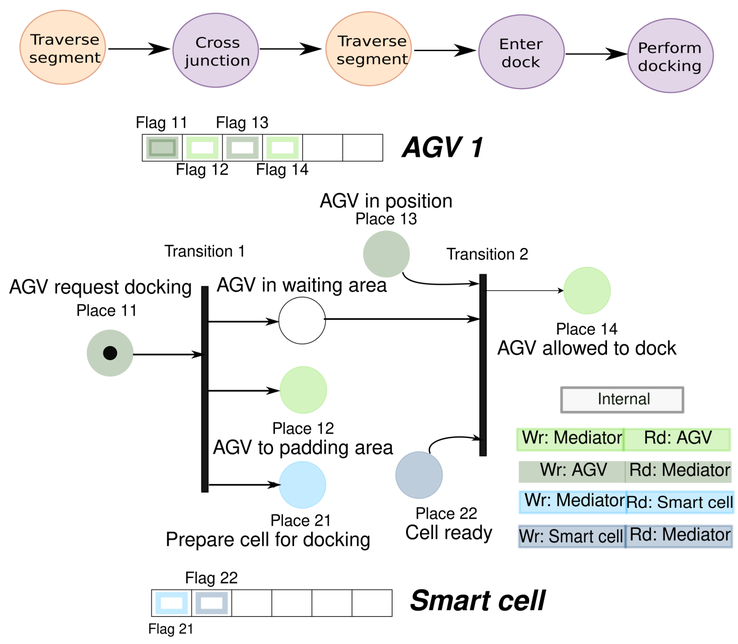

Role of the Petri net mediator

Decouples the execution of **coordinated** activities or robots

- Only agent in the execution **aware** of the **shared** tasks
- Executes the Petri Net
- Synchronizes the Petri net and shared buffers according to protocols

Concept of stable states

State in which the operation can be **stopped safely** and re-activated **later** in the process.

Experimental demonstrators

Rush order AGVs coordination in *warehouse* area

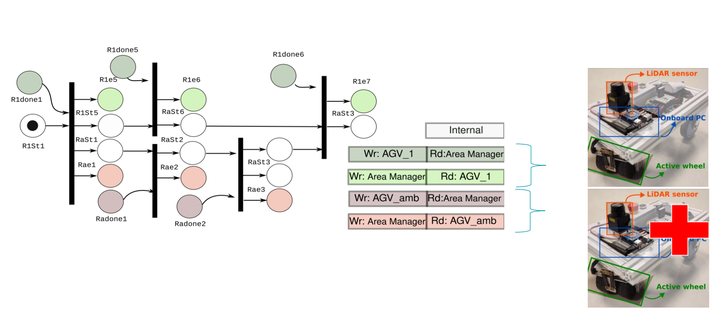

Multi-vendor AGVs reactive coordination in docking area

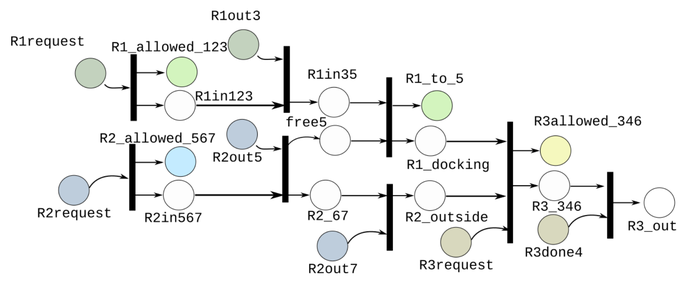

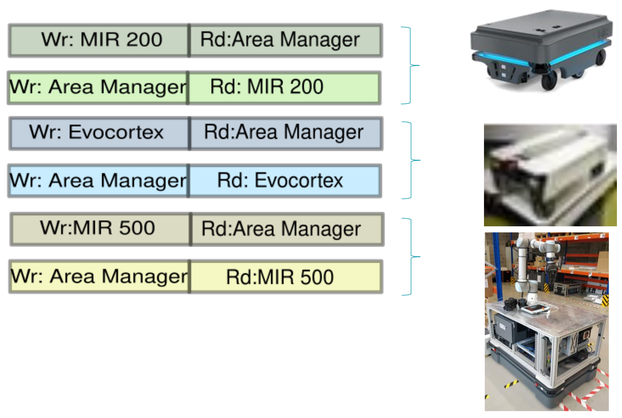

Ongoing work



Key take-aways

Set of **primitives** to **coordinate** the execution of **multi-robot** applications.

Petri net **mediator** to **restrict** the **information** of **each robot** to its own execution in the coordination.

KU LEUVEN

mariaisabel.artigasalfonso@kuleuven.be

For Publication