

Journal of Building Performance Simulation

ISSN: (Print) (Online) Journal homepage: www.tandfonline.com/journals/tbps20

Controls of HVAC systems in digital twins – comparative framework and case study on the performance gap

Karl Walther, Marco Molinari & Karsten Voss

To cite this article: Karl Walther, Marco Molinari & Karsten Voss (08 Jan 2025): Controls of HVAC systems in digital twins – comparative framework and case study on the performance gap, Journal of Building Performance Simulation, DOI: 10.1080/19401493.2024.2446517

To link to this article: https://doi.org/10.1080/19401493.2024.2446517

© 2025 The Author(s). Published by Informa UK Limited, trading as Taylor & Francis Group.

Published online: 08 Jan 2025.

Submit your article to this journal

Article views: 462

View related articles

View Crossmark data

Full Terms & Conditions of access and use can be found at
https://www.tandfonline.com/action/journalInformation?journalCode=tbps20

JOURNAL OF BUILDING PERFORMANCE SIMULATION
https://doi.org/10.1080/19401493.2024.2446517

OPEN ACCESS Check for updates

Controls of HVAC systems in digital twins – comparative framework and case study on the performance gap

Karl Walther[a,b], Marco Molinari[c,d] and Karsten Voss[a]

[a]School of Architecture and Civil Engineering, University of Wuppertal, Wuppertal, Germany; [b]Department of Mechanical Engineering, University of Leuven (KU Leuven), Leuven-Heverlee, Belgium; [c]Department of Energy Technology, KTH Royal Institute of Technology, Stockholm, Sweden; [d]KTH Live-In Lab, Stockholm, Sweden

ABSTRACT

Digital Twins are a promising concept to integrate model-based design and operational applications. This study focuses on the control-related performance gap of heating, ventilation, and air-conditioning (HVAC) systems using physics-based models in Building Performance Simulation environments as Digital Twins. We present a comparative framework to contrasts the current practice of replicating HVAC controls in Digital Twins and novel approaches to use Digital Twins for the specification of HVAC controls. The application of this framework to air handling units in a case study building underlines, that the replication of either designed or implemented HVAC controls in Digital Twins is work-intensive, associate with significant uncertainties, and inevitably results in a performance gap. The control-related performance gap can be closed when HVAC controls are identically transferred from a Digital Twin Prototype on building controllers which is demonstrated using the BPS software IDA ICE and the IEC 61131-10 XML exchange format.

ARTICLE HISTORY
Received 12 March 2024
Accepted 16 December 2024

KEYWORDS
Digital Twin; HVAC systems; controls; PLC; performance gap; building energy modelling

1. Introduction

1.1. Control-related performance gap of HVAC systems

The building sector is facing major challenges due to the need to reduce the energy consumption and the carbon footprint. At the same time, user requirements and expectations are rising and climate change is reinforcing the challenge of summer thermal comfort in buildings. To provide both energy efficiency and comfort, today's buildings are increasingly equipped with heating, ventilation, and air conditioning (HVAC) systems. Controls are indispensable for the energy efficient operation of such systems.

From past research projects, a gap between the expected performance of reference models and the actually measured performance (see Figure 1) is well documented (Li, Iulo, and Poerschke 2023; Van Dronkelaar et al. 2016; Wilde 2014). According to Wilde (2014), the root causes include, among others, differences related to the real and expected performance of components, modelling assumptions, simplifications, and faults, the influence of actual occupant behaviour, climate and loads, or the measurement infrastructure.

The present study focuses on the performance gap of HVAC systems which is caused by different implementations of control sequences on building controllers and in reference models. In the context of HVAC systems in buildings, such reference models are commonly created in Building Performance Simulation (BPS) environments.

Focusing on controls is particularly promising to close the performance gap because control sequences as mathematical expressions can be implemented identically in simulation models and on building controllers (see bottom in Figure 1). In contrast, models of buildings and HVAC systems usually describe complex physical systems in a simplified and idealized way, which inevitably leads to a performance gap (see top in Figure 1). This applies particularly to measurements that are generally regarded as ideal in simulations and for which confidence intervals must be taken into account in practice.

The control-related performance gap of HVAC systems can be described from a design and from an operational perspective: According to Van Dronkelaar et al. (2016), the *static performance gap* is the deviation between the model performance during the design phase and the actual measured performance and the *dynamic performance gap* the deviation between calibrated models and measurements in operation.

The performance gap in general, and the control-related performance gap in particular, is a problem because reliable models are required for robust

CONTACT Karl Walther karl.walther@kuleuven.be

© 2025 The Author(s). Published by Informa UK Limited, trading as Taylor & Francis Group.
This is an Open Access article distributed under the terms of the Creative Commons Attribution License (http://creativecommons.org/licenses/by/4.0/), which permits unrestricted use, distribution, and reproduction in any medium, provided the original work is properly cited. The terms on which this article has been published allow the posting of the Accepted Manuscript in a repository by the author(s) or with their consent.

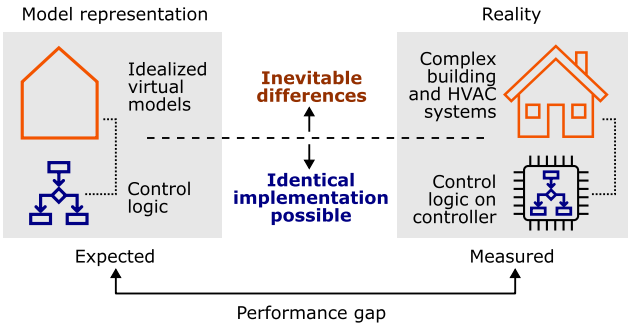

Figure 1. Relation of HVAC systems and controls in model representations and real buildings, and resulting performance gap.

decision-making and, accordingly, deviations of the model behaviour the real building bias the decision making. This accounts both for decisions in the design as well as in the operation phase: If controls from a design model are not identically implemented in the building, the resulting *static performance gap* concerns different operation modes or different part load ratios of HVAC systems, different energy consumption, and different indoor comfort than expected. If controls implemented on building controllers are not identically reflected in (calibrated) models, the resulting *dynamic performance gap* biases decisions during operations.

1.2. Digital Twins

Using model representations for decision making is a core feature of the Digital Twin concept. Digital Twins are a key concept of Industry 4.0 (Cañas et al. 2021; Javaid, Haleem, and Suman 2023) and generally include three elements (Grieves 2014; VanDerHorn and Mahadevan 2021) (see Figure 2): first, the real system, here the real building including HVAC systems and controls, referred to as Physical Twin (right in Figure 2), second, a virtual model representation referred to as the Digital Twin (left in Figure 2), and third, a bidirectional exchange of data and information which enables updating the Digital Twin and feedback to the Physical Twin (bottom in Figure 2). Different model types, such as data-driven black-box models or physics-based white-box models are commonly used depending on the purpose of the application (Ruepp et al. 2022; VanDerHorn and Mahadevan 2021).

In order to describe different life cycle phases, Grieves and Vickers (2017) introduced a Digital Twin Prototype and a Digital Twin Instance (see Figure 2): While the purpose of the Digital Twin Prototype is to predict the future behaviour in order to support conceptualization and decision making in the design phase before the Physical Twin exists, the Digital Twin Instance is linked to data from the Physical Twin and is used for model-based applications during operation. Applied to HVAC

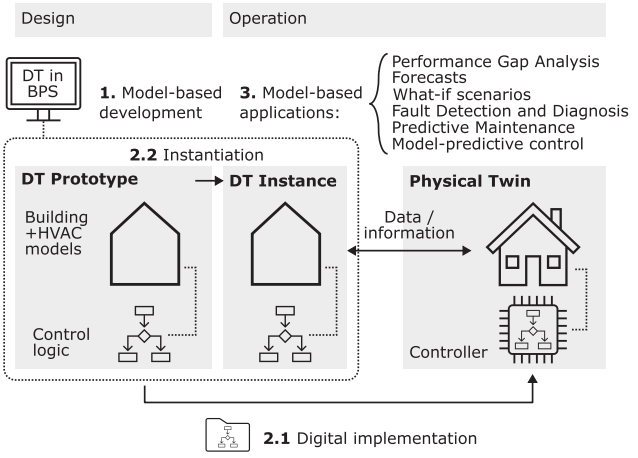

Figure 2. Digital Twin concept according to Grieves and Vickers (2017) applied to HVAC system controls.

system controls, this translates to the following steps (see Figure 2):

(1) *Design stage:* Control sequences are developed and tested in the building context, i.e. together with building and HVAC models, in a Digital Twin Prototype ('1' in Figure 2). The integrated design of control sequences and HVAC systems enables optimized selection and sizing of HVAC components, for example in order to prevent oversizing. The performance of HVAC systems and control sequences in simulations is analyzed and optimized including what-if scenarios and testing against defined key performance indicators (KPIs) to support decision-making.
(2) *Execution stage:* Construction of HVAC systems and implementation of control sequences according to the specifications of the Digital Twin Prototype ('2.1' in Figure 2). The Digital Twin Instance is created by replacing standard inputs and time series which were used during the controls development in the Digital Twin Prototype by measured data from operation ('2.2' in Figure 2).
(3) *Operation stage*: The Digital Twin is continuously used as Digital Twin Instance for model-based applications[1] ('3' in Figure 2) such as:
    - *Performance gap analysis* through a comparison of measured and simulated performance indicators in order to gain a deeper understanding of the physical processes or user-behaviour and to critically assess modelling approaches.
    - *Forecasts* of the future building behaviour under unchanged conditions to support decision-making.
    - *What-if analyses* of the future building behaviour under variable conditions to support decision-making.

- *Fault Detection and Diagnosis* through a comparison of measurements against the expected model behaviour.
- *Predictive Maintenance* of components taking into account degradation.
- *Model predictive control* based on predictions of the future behaviour.

Calibration and refinement of building and HVAC system models at the beginning of the operation based on the gap with the measured performance can be applied to increase the model accuracy and therefore the performance of model-based applications (Ruepp et al. 2022; Viola and Chen 2020).

Depending on the intended use cases in operation, an automatic, manual, online, or offline data exchange is established (Kritzinger et al. 2018; VanDerHorn and Mahadevan 2021). For Fault Detection and Diagnosis (FDD), for example, a manual import of measured data in the model might be sufficient and the feedback to the real systems typically requires manual intervention. For Model predictive control (MPC), on the other hand, an automatic online exchange is required in both directions.

Following these fundamentals, two types of link between the Digital Twin and the Physical Twin have to be distinguished: first, the manual on-demand implementation of control sequences from the Digital Twin Prototype in the Physical Twin, and second, the exchange of data exchange in operation.

The Digital Twin concept and existing applications in various industrial sectors have been extensively reviewed in the literature (Jones et al. 2020; Kritzinger et al. 2018; Perno, Hvam, and Haug 2022; Rasheed, San, and Kvamsdal 2020; Roy et al. 2020; Semeraro et al. 2021; Singh et al. 2021; Tao et al. 2019; Wright and Davidson 2020; Zhou, Zhang, and Gu 2022). Building-specific aspects, such as the relation to Building Information Modeling (BIM), were investigated by Sacks et al. (2020), Boje et al. (2020), Khajavi et al. (2019), and Davila Delgado and Oyedele (2021). The authors emphasize that the link between measured data and the model for operational applications is a key element of Digital Twins which distinguishes the Digital Twin concept for from the BIM method. The general relation of Building Performance Simulations (BPS) and the Digital Twins approach is discussed by Wilde (2023) in the context of other technologies such as artificial intelligence (AI) or Machine Learning (ML).

For a review of documented Digital Twin applications in the literature, studies which use the 'Digital Twin' keyword[2] and address concrete applications have been selected (see Table 1). The selected examples are covering HVAC systems in general, but not all are explicitly targeting HVAC system controls. Three approaches can be distinguished:

Applications focussing only on the design phase. A common critique with respect to Digital Twins which are created for prototyping only without further use in operation is that they do methodologically not differ from established modelling and simulation practice in engineering (Wright and Davidson 2020). VanDerHorn and Mahadevan (2021) argue that only the update of a single instance of the virtual model representation by measured data from the physical object distinguishes pure simulation models from Digital Twins. Similarly, in an analysis of the overlaps and differences between the Digital Twin concept and established BPS tools, Wilde (2023) points out that the bidirectional exchange of data and information for operational applications is a key feature of Digital Twins.

Applications focussing only on the operation phase. A common problem for such applications in operation is that actually implemented control sequences have to be modelled in Digital Twins: Simonsson et al. (2021), for example, replicate control sequences of a District Heating Network (DHN) based on available design documents or measurements for performance analyses or what-if analyses. Hosamo et al. (2022) uses expert rules for FDD of air handling units (AHUs) and ML techniques for Predictive Maintenance (PM).

Applications integrating design and operation. Only applications which integrate prototyping during the design phase and applications in operation comply with the Digital Twin Prototype/Instance concept by Grieves and Vickers (2017). Nytsch-Geusen et al. (2019) demonstrated the development of a control strategy for a ventilation system and a floor heating system in the home automation software openHAB (openHAB Foundation e.v 2024) coupled with a Modelica model for the building including HVAC systems which was then implemented for performance gap analyses between measured and simulated performance in operation. Clausen et al. (2021) and Berger et al. (2022) develop MPCs for components and buildings, respectively, in a design stage which are then used during operation. Lydon et al. (2019) describes the prototyping of a thermally activated building system (TABS) component model which is also intended, but not demonstrated,[3] to be used for control performance analysis during operation.

A separate column in Table 1 indicates the use of white-box models in BPS environments. The classification in reveals that among the selected Digital Twin applications, white-box models in BPS tools are more frequently

Table 1. Literature review of energy-related Digital Twin applications during design and operation.

		Design	Operation						
Source	DT approach	Prot	PGA	Fore	w-if	FDD	PM	MPC	w-b BPS
Buckley et al. (2021)	des.	x	–	–	–	–	–	–	x
Marchione and Ruperto (2022)	des.	x	–	–	–	–	–	–	x
Tariq et al. (2022)	des.	x	–	–	–	–	–	–	–
Agouzoul, Simeu, and Tabaa (2023)	des.	x (MPC)	–	–	–	–	–	–	–
Lydon et al. (2019)	des.(op.)	x	(x)	–	–	–	–	–	x
Cai, Khayatian, and Heer (2021)	des.(op.)	x (MPC)	–	–	–	–	–	(x)	x
Nytsch-Geusen et al. (2019)	integ.	x	x	–	–	–	–	–	x
Berger et al. (2022)	integ.	x (MPC)	–	–	–	(x)	(x)	x	–
Clausen et al. (2021)	integ.	x (MPC)	–	–	–	–	–	x	–
Spudys et al. (2023)	op.	–	x	–	–	–	–	–	–
Simonsson et al. (2021)	op.	–	x	–	x	–	–	–	x
Ward et al. (2023)	op.	–	x	x	–	–	–	–	–
Ward et al. (2023)	op.	–	–	–	x	–	–	–	x
Bjørnskov and Jradi (2023)	op.	–	–	–	(x)	(x)	–	–	–
Plesser (2018)	op.	–	–	–	–	x	–	–	–
Xie et al. (2023)	op.	–	–	–	–	x	–	–	–
Peng et al. (2020)	op.	–	–	–	–	x	x	–	–
Hosamo et al. (2022)	op.	–	–	–	–	x	x	–	–
Lu et al. (2020)	op.	–	–	–	–	–	x	–	–

Note: DT approach: des.: applications focussing only on the design phase. op.: applications focussing only on the operation phase. integ.: applications integrating design and operation. Prot: prototyping, PGA: Performance gap analysis, Fore: forecast. w-if: what-if analysis, FDD: Fault detection and diagnosis, PM: Predictive maintenance, MPC: Model-predictive control. (x): described but not implemented in practice. w-b BPS: use of white-box models in Building Performance Simulation (BPS) tools.

used for prototyping purposes during the design phase than for operational applications. This does not mean that white-box models in BPS tools have not been used for the described use cases in the past; the added value of BPS to support the operation is well documented (Hensen and Lamberts 2019; Visier and Buswell 2010). However, some authors point out that the high modelling effort of white-box models is a barrier for Digital Twin applications in operation and emphasize the advantage of data-driven approaches (Bjørnskov and Jradi 2023; Tariq et al. 2022).

1.3. Research gap and research questions

To tackle the control related performance gap, the question how control sequences can be identically implemented in models, used both in design and operation, and on building controllers comes in the focus. The integrated application of the Digital Twin Prototype / Digital Twin Instance concept in design and operation appears as a promising solution. However, the separation of documented Digital Twin applications for HVAC systems in the literature in either the design phase or in the operation phase implies that a common understanding of how Digital Twins should be used might be missing. In general, a sound analysis of the role of HVAC system controls in Digital Twins is missing in the literature. Although a formal definition for the Digital Twin concept does not exist, the generally accepted design-build-operate approach with a Digital Twin Prototype and a Digital Twin Instance is not the standard in documented applications and only applied in a few cases. This raises the questions, what the underlying reasons and barriers for the application of the Digital Twin concept are and how an integrated application for HVAC system controls would look like in practice. In the context of HVAC system controls, this requires an analysis of the current practice regarding industry standards for the documentation and communication of control sequences such as EN ISO 16484-2:2004 (International Organization for Standardization 2005) or VDI 3814-4.3:2022 (Verein Deutscher Ingenieure 2022) and digital exchange formats such as the IEC 61131-10 XML standardized in IEC 61131-10 (International Electrotechnical Commission 2019).

In order to address these questions, the present study uses a comparative framework to contrast different options to either replicate controls implemented in building controllers in Digital Twins or to use Digital Twin for the specification and implementation of controls on building controllers. This comparative framework is applied to AHUs in a case study building.

The remainder of this paper is structured as follows: first, the methodical framework for the comparison of options to represent controls in Digital Twins is presented in Section 2. Then, the application of this framework in a case study building is described in Section 3. The results and findings are finally analyzed and summarized in Section 4.

2. Methodical framework for comparison

The present study compares two approaches to use controls in Digital Twins and evaluates the relation of either

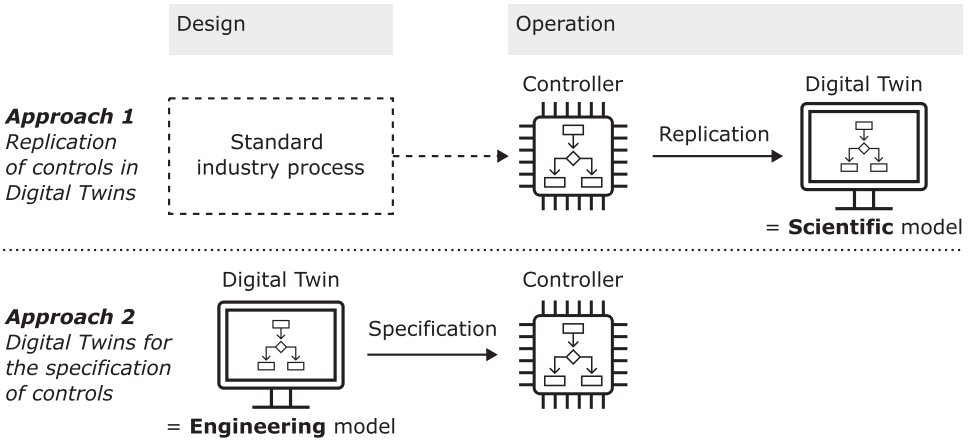

Figure 3. Approaches for the replication or the specification of controls in Digital Twins according to Lee and Sirjani (2018).

approach to the control-related performance gap (see Figure 3):

- Approach 1: Replication of control sequences implemented in a building controller in a Digital Twin during operation.
- Approach 2: Specification of control sequences from a Digital Twin for the implementation in a building controller.

The present study focuses on physics-based white-box models because as multi-purpose models they can be used for all of the Digital Twin applications identified in Section 1.2.[4] Moreover, their strength particularly lies in decision-making support in both new and existing buildings as they allow for a high resolution prediction of the thermal comfort in time and space.

The possibilities to model HVAC systems and controls in detail, either for the modelling of existing systems or for design, have been significantly expanded in the last two decades, primarily through the development of libraries for equation-based simulation environments (Maier et al. 2023; Wetter et al. 2014). Figure 4 shows a simple example of a heating coil and a PI controller with an ambient temperature dependent setpoint in the BPS environment IDA ICE (EQUA Simulation AB 2024).

Moreover, this study focuses on the challenges related to conventional Rule-based controls (RBCs) which are still the standard in building industry practice.

The distinction between the replication of controls in models and the specification of control sequences from models within the present framework corresponds to what Lee and Sirjani (2018) describe as 'scientific models' and 'engineering models' (see Figure 3): In 'scientific models' (corresponds to approach 1), the observed control behaviour in operation (i.e. 'how *does* the system work?') is replicated. Control sequences in an 'engineering model'

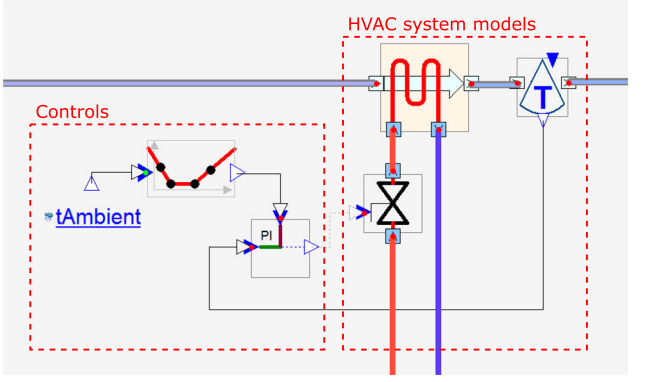

Figure 4. Example for the modelling of a heating coil and control function blocks in IDA ICE.

(corresponds to approach 2) are used, from a design perspective, to specify the control implementation for real operation (i.e. 'how *should* the system work?').

In the case of the replication of control sequences (approach 1), the development and implementation of HVAC control sequences is assumed as a result of standard industry processes (see box in Figure 3). This reflects the situation in many scientific applications, where the development and the implementation of control sequences according to these standard industry processes are executed in parallel to research activities. The description of approach 1 (Section 2.1) includes an analysis of these industry processes.

2.1. Replication of controls in Digital Twins

In order to replicate controls in Digital Twins in operation, four sources of information are distinguished. These four sources can be further separated in whether they describe the control logic *intended* in the design stage or the *actually implemented* control logic in the execution stage (see Figure 5):

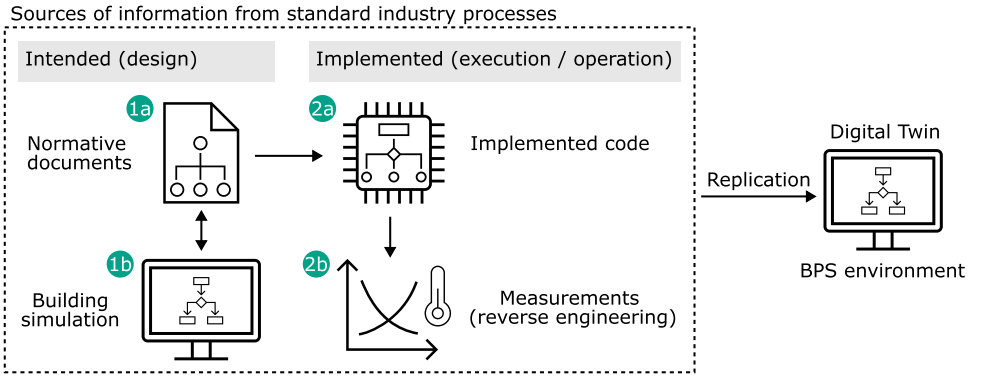

Figure 5. Options for the information collection about controls for building Digital Twins in operation.

(1) Control logic *intended* during the design phase:
   (a) (a)*Normative design documentation:* Controls of HVAC systems should be developed and defined by HVAC and automation engineers in the design phase. Normative design documents according to DIN EN ISO 16484-3:2005 or the updated national guideline VDI 3814-4.3:2022 should unambiguously describe the intended control logic ('1a' in Figure 5).
   (b) (b)*Existing BPS models:* If simulations were performed in the design phase, information about intended controls can be adopted from existing BPS models ('1b' in Figure 5). According to Grieves and Vickers (2017), such a continued use of models from the design phase (Digital Twin Prototype) for applications during operation (Digital Twin Instance) should be sought for (see Section 1.1).

(2) *Actually implemented* control logic:
   (a) (a)*Control code implemented on building controllers:* The actual operation of HVAC systems is defined by the code implemented on building controllers ('2a' in Figure 5).
   (b) (b)*Reverse engineering from measured data:* If the planned control logic is not documented or the implemented control code is not available, possible control sequences can be reverse engineered based on measured data ('2b' in Figure 5). Prerequisites for such an approach are sensors at relevant positions and expert knowledge about common control principles. Data shortages and measurement tolerances must be taken into account.

Depending on the interface provided by the selected BPS environment, the replicated control sequences are typically expressed in textual languages or graphical representations such as Function Block Diagrams.

2.2. Digital Twins for the specification of controls

When Digital Twins are used for the used for the specification of controls, the perspective switches to a design situation, either for the development of control sequences in new buildings or for the revision of control sequences in existing buildings. This design model, the Digital Twin Prototype, can be further used as Digital Twin Instance for model-based applications in operation. The control development has to be performance oriented along testable metrics for functional requirements, robustness, efficiency, and flexibility on system and building level and cover the range of expected future boundary conditions. Compliance with minimum legal requirements or more ambitious user-defined targets is verified by comparing variants in 'what-if' scenarios. Systematic approaches such as platform-based design (Sulzer et al. 2023) can help to support the efficient and optimal selection and the reuse of tested systems.

These tested control sequences are then implemented in the real building.[5] This is a crucial step to ensure that controls in the Digital Twin (prototype and instance) and the Physical Twin are identical. Transferring and implementing control sequences from BPS environments on building controllers is a challenging task due to the different computational approaches of BPS tools and building controllers (Sahlin, Bring, and Eriksson 2009). Today, the following examples for digital exchange formats and associated toolchains can be distinguished (see Table 2):

(1) The IEC 61131-10 XML format standardized in IEC 61131-10 enables the exchange of control programs between IDEs (Integrated Development Environments) for PLCs which follow the IEC 61131 standard. Sahlin, Skogqvist, and Högberg (2018) developed a toolchain which enables the simulation of PLC code within the BPS software IDA ICE. This toolchain includes the open-source PLC IDE Beremiz (Beremiz

Table 2. Examples to digitally transfer controls from simulation environments on building controllers.

	Simulation environment (Digital Twin Prototype)	Exchange format	Controller/IDE (Physical Twin/building)
1	Environment supporting the simulation of IEC 61131-3 code, for example IDA ICE	IEC 61131-10 XML (IEC 61131-10)	programmable logic controllers (PLCs) following IEC 61131 supporting the IEC 61131-10 XML import
2	Environment supporting the Modelica-based Control Description Language (CDL) and the Control Exchange Format (CXF) export	CXF JSON-LD (ASHRAE 231P)	Building controller with CDL support
3	Environment supporting FMU export	FMU	Controller supporting FMU import

SAS 2024) which enables the export of PLC programs in the IEC 61131-10 XML format.

(2) Within the framework of the OpenBuildingControl (OBC) project, the Modelica-based Control Description Language (CDL) and a Control Exchange Format (CXF) for the digital specification of control sequences were developed (Wetter, Grahovac, and Hu 2018; Wetter et al. 2022). Control sequences expressed in CXF can be translated into vendor-specific languages (Wetter et al. 2021) and thus be implemented on CDL-compliant controllers.

(3) The emerging Functional Mock-up Interface for embedded systems (eFMI) standard (Lenord et al. 2021) enables the exchange of control sequences between simulation environments on building controllers supporting the import of Functional Mock-up Units (FMUs).

These technologies for exporting control sequences from BPS tools to building control systems are relatively new, not yet productive features of BPS environments and extensive experience in the construction industry and practice is therefore not yet available.

3. Case study

3.1. Case study building

The previously described approaches for the replication or the specification of HVAC control sequences are applied to AHUs in a factory building (Wilopark / Germany, see Figure 6). The AHUs are sized identically and designed for parallel operation, i.e. the supply air flows are first merged and then split into two zones. Each AHU has a heating coil and a cooling coil, mixed air dampers, closed loop liquid heat recovery and an adiabatic extract air humidifier. The air volume can be varied by zone using variable air volume (VAV) boxes.

3.2. Replication of controls in Digital Twins

In the following, the four options to replicate control sequences depicted in Figure 3 are analyzed.[6]

3.2.1. Design documentation

From the design phase, an automation scheme and a textual functional description according to VDI 3814-4.3:2022 are available. However, the automation scheme lacks the functional structure including control parameters and the characteristic curves (right in Figure 7), and therefore does not meet the normative requirements (left in Figure 7). In addition, instead of the built configuration (see Figure 6), the automation scheme shows a sequence with heating coil, supply air fan, cooling coil and steam evaporator in the supply air duct.

The textual functional description describes the intended operation as follows:

'The supply air temperature is controlled depending on the room temperature. The continuous controller compares the room temperature measured by the sensor with the set point. If there is a deviation, the controller causes the heating or cooling valve to be adjusted. […] A supply air temperature minimum limitation ensures that the supply air cannot be blown in so cold that unpleasant drafts occur […]. The supply air may be blown in at a maximum of 2 K (freely parameterizable) below the room temperature. The room ventilation must be controlled depending on the humidity in the room. If this value is exceeded, the supply air volume flow is increased up to the maximum value.'

The description mentions the heating and cooling coils as well as the volume flow control through the VAV boxes, but omits the heat recovery, the mixed air dampers, and the adiabatic extract air humidification. Moreover, the textual description (and the automation scheme) are identical for both AHUs and do not describe if or how control sequences of both units interact, although a mutual interaction is inevitable given the physical split/merge connection between AHUs and zones.

In general, the description is rather functional and qualitative. A much more detailed description would have been needed to compensate for the lack of information in the automation schemes. Lacking information, a low level of detail, and ambiguities in the textual description are major barriers for the replication of controls in Digital Twins. Despite the limitations of graphical automation schemes and textual descriptions, these means of communication and documentation might be

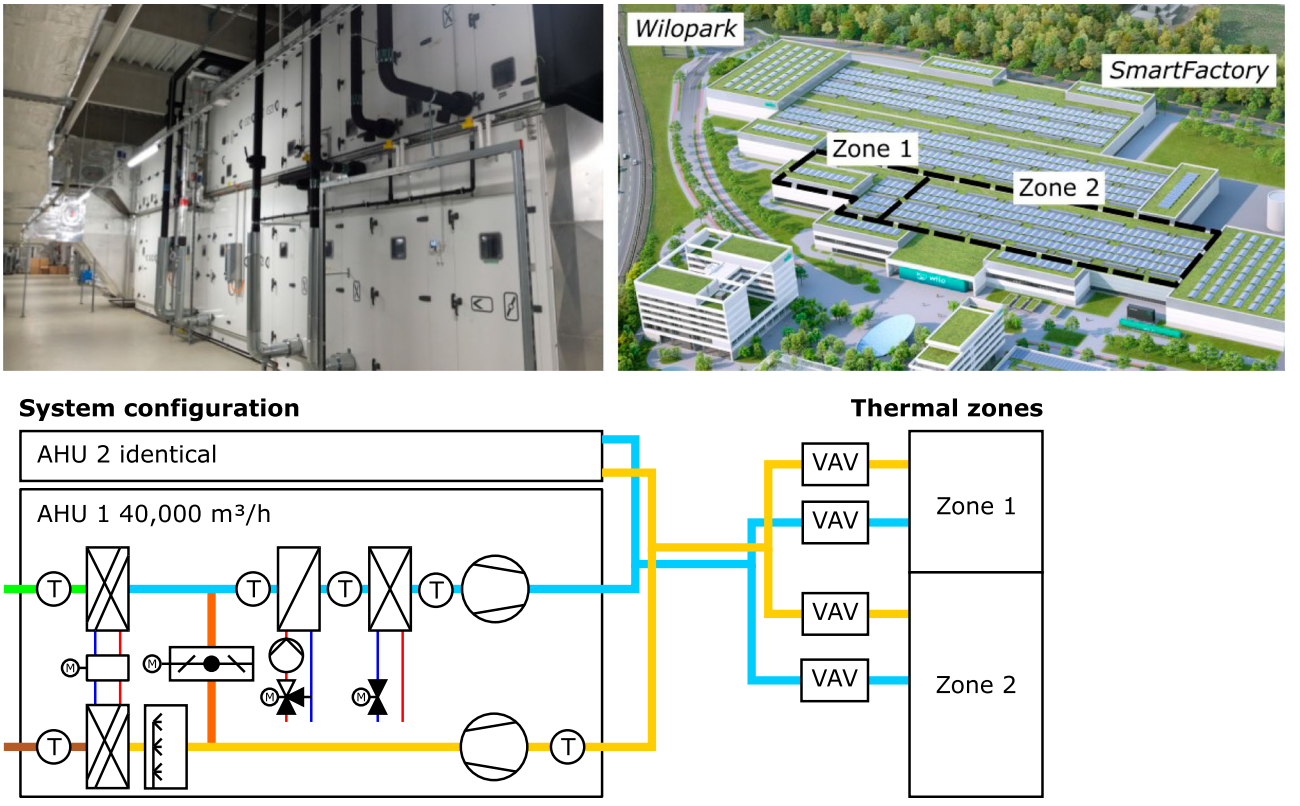

Figure 6. Wilo factory building. Top left: air handling unit. Top right: Aerial view (source: Wilo SE) and investigated zones. Bottom: AHUs (without outdoor air flaps, filters and sound absorbers) and connected zones.

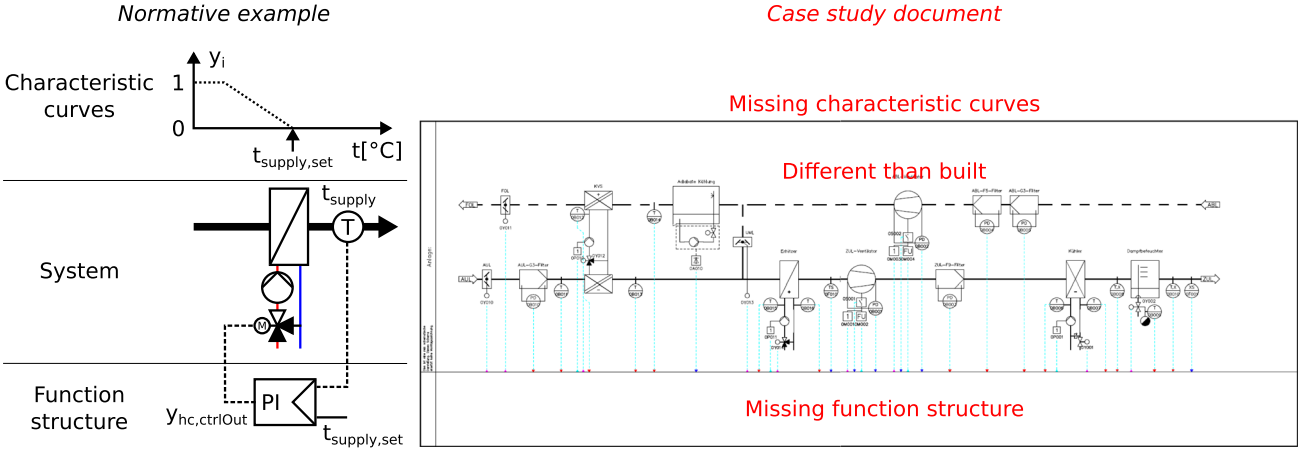

Figure 7. Left: exemplary automation scheme according to DIN EN ISO 16484-3:2005 / VDI 3814-4.3:2022 for the control of a heating coil. Right: automation scheme as design documentation for the case study AHU (source: WILO SE).

sufficient for simpler and more common configurations of AHUs as described in a previous study (Walther, Molinari, Voss 2023).

3.2.2. BPS models from the design phase

During the design phase, simulations were performed by an external service provider using the BPS software TAS (Environmental Design Solutions Ltd 2024). The simulation of thermal zones focussed on the calculation of load profiles for heat, cooling and electricity. System simulations were performed for the heat and cooling supply system in order to compare different system configurations.

The simulations were used to support the design process but not to specify control sequences, for instance for the AHUs. Regarding controls, TAS has several limitations, such as limited possibilities to define custom control sequences, a fixed hourly time step which limits

the detailed simulation of controls behaviour, and the separation of the simulation of thermal zones and HVAC systems in separated, not coupled software components. This reflects typical limitations of traditional building simulation tools (Wetter 2009).

Even if the simulation models contained detailed specifications of control sequences, the models were not made available by the consultant and were therefore not available for further Digital Twin applications. According to the authors experience, this problem reflects current practice in the building sector where model exchange between different service providers is not common.

3.2.3. Control code implemented on building controllers

The original control program for the AHUs was implemented on a PLC which follows the IEC 61131 standard. For these AHUs, control sequences of all actuators can be programmed freely and no proprietary controls, for instance for valves and pumps, were used. The controller was programmed using the commercial IDE e!cockpit (WAGO GmbH & Co. KG 2024) which allows programming in the five languages defined in IEC 61131-3. The controls were implemented by an executing company in Structured Text according to IEC 61131-3. The control code was made available to the operator as part of the research project. However, this is not common practice and the implemented control code might often not be accessible.

Based on the available control code and the explanations of the executing engineer, the implemented control logic can be described as follows (see simplified functional diagram in Figure 8): The extract air temperature is the controlled variable. A so-called cascade control is used, which first compares the extract air temperature with the setpoint to determine a target supply air temperature (`cCasc` in Figure 8). Upper and lower supply air temperature limits are considered. The sequence controller `cSeq` compares this target supply air temperature with the measured supply air temperature. The control signal of `cSeq` takes values between 0% and 100%, where values below 50% correspond to a heating signal and values above 50% correspond to a cooling signal. This output signal is the input for the function blocks `cHc` (heating coil), `cCc` (cooling coil), `cMix` (mixing box) and `cHx` (heat recovery). The regulation of the indoor air humidity described in the textual description is not implemented which underlines a discrepancy between the intended control logic and the implemented control program. However, a systematic comparison is hardly possible due to the low level of detail of the design documents (see Section 3.2.1).

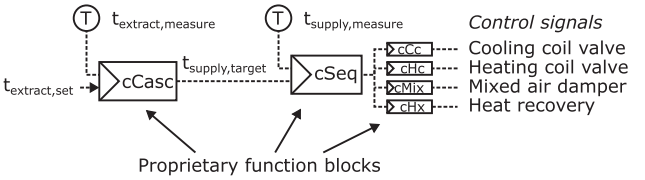

Figure 8. Simplified function structure of the control sequence in the case study AHU based on the implemented control code.

The main obstacle for a replication of the control code in a simulation environment is that the function blocks depicted in Figure 8 are proprietary. Their behaviour and inputs and outputs are described in a manual by the developer of the IDE (WAGO 2022), but the underlying code is not available. Taking the example of a PI-controllers, the general behaviour could be replicated, however, the anti-windup algorithms might differ.

Another practical barrier for an efficient replication are the length and complexity of the control program which has about 500 lines of code. Even for experienced engineers it may be difficult to identify the relevant parts and correctly reproduce the control program in another environment.

The e!cockpit IDE used supports the export in the IEC 61131-10 XML format standardized in IEC 61131-10. This would theoretically enable using a workflow described by Sahlin, Skogqvist, and Högberg (2018) where PLC code is simulated in the BPS software IDA ICE (reversed direction of the workflow described in Section 2.2 'option 1)'). However, the use of proprietary function blocks impedes such a seamless exchange of control logic between different applications.

Another challenge for performance analyses based on historical data are changes to the control program and parameter settings over time. In order to keep track of such changes, a version history would be required which is not a standard procedure in today's building operation practice.

3.2.4. Reverse engineering

The AHUs are equipped with numerous sensors (see Figure 6). However, temperature measurements between the heat recovery and the mixed air damper are missing, for example. The measurements allow for detailed analysis of the system behaviour and, to a limited extend, understanding of the implemented control behaviour.

Figure 9 shows the time series of two 5 day periods during winter and summer as well as the scatter plot for more than two years of measured data. The time series in the heating case (Figure 9(i)) illustrates that the extract air temperature is the controlled value and that supply air temperatures have upper and lower limits in the order

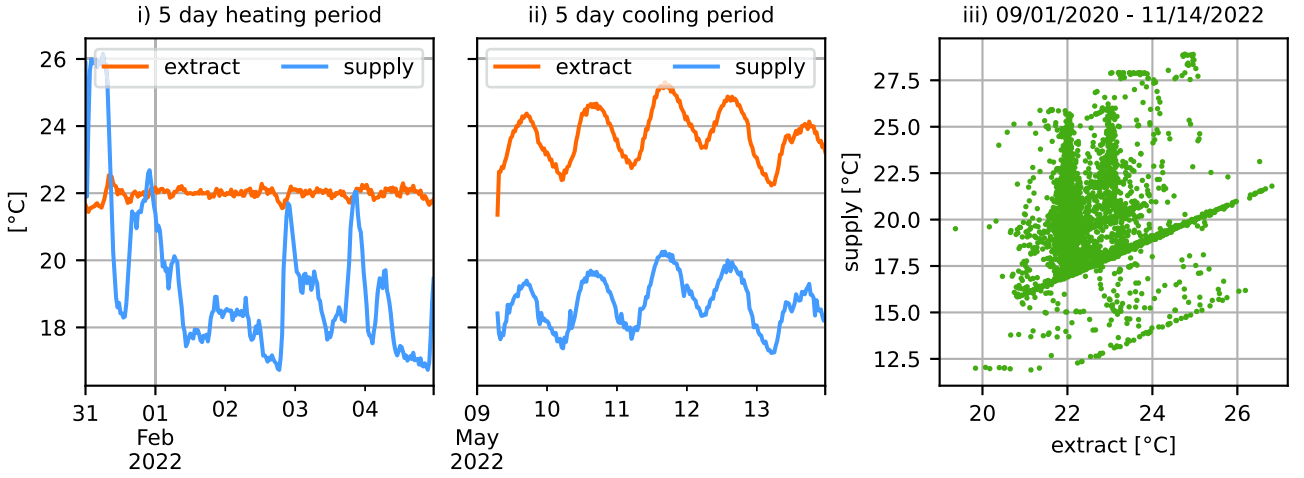

Figure 9. Measured times series and scatter plot of the extract and supply air temperatures of the case study AHU.

of 26 °C and 17 °C. In the cooling case (Figure 9(ii)), a maximum undertemperature of about 5 K between the extract and supply air temperature is kept. The scatter plot over the entire observation period (Figure 9(iii)) shows changes of the extract air temperature setpoint (vertical point groups), the supply air temperature upper boundaries, and the supply air undertemperature setpoint (different linear curves). A general problem for analyses was that setpoints were initially not recorded in the database. Furthermore, the naming of data points was sometimes ambiguous and unclear which made it difficult to identify the relevant data points.

Based on the measured time series, the basic principle of an extract air temperature control with a supply air temperature within defined boundaries and a fixed maximum undertemperature below the extract air temperature can be deduced. During the observation period, the mixed air dampers were kept in fixed positions, mostly closed, the VAV boxes were operated at maximum opening, and the extract air humidifier was not in operation, which greatly simplifies the replication of a possible control sequence, typically with a priority for the heat recovery and activation of the heating coil and the cooling coil if the output signal of the sequence controller (`cSeq` in Figure 8) exceeds a certain threshold. Taking the example of a PID controller, the unknown parameters for the proportional, integral, and derivative parts could be calculated based on measured time series of inputs and output for a given mathematical implementation. However, first, such block-wise input-output time series are typically not recorded by building automation systems, and second, the exact mathematical implementation of a proprietary PID controller, for instance regarding anti-windup, gain scheduling, or noise suppression, is unknown. Moreover, the blocks `cCasc` and `cSeq` in Figure 8 are composite blocks with PID behaviour but they might include other unknown functions with more unknown parameters. Finally, if not only the heat exchanger, the heating coil, and the cooling coil, but also mixed air dampers, and the adiabatic extract air humidifier, were actively controlled, replicating the unknown sequencing, that means the way internal function blocks are connected and parametrized, based on measured time series for inputs (measured supply air temperature, measured extract air temperature and setpoint) and outputs (control signals for the actuators), would be highly intricate, if not impossible, time consuming, and associated with big uncertainties. In such cases, control sequences have to be considered a black-box and it seems a more efficient option to imitate them with data-based approaches. In general, reverse engineering controls from measured data appears only possible for less complex systems.

3.3. Digital Twins for the specification of controls

For the analysis of using a Digital Twin for the specification of control sequences (see Figure 3), existing control sequences of the AHUs in the factory building presented in Section 3.1 were revised. As the AHUs already existed, no integrated controls and HVAC engineering was performed and the AHUs were modelled based on available information. A performance gap analysis is carried out as model-based application in operation in order to analyze whether the control-related performance gap is closed. The individual steps are described in the following sections and depicted in Figure 10.

3.3.1. Controls development in the design phase

For the controls design, a toolchain with IDA ICE as BPS environment and Beremiz as development environment for PLC code developed by Sahlin, Skogqvist, and Högberg (2018) was used (see Table 2). This toolchain enables the simulation of real control programs in discrete time

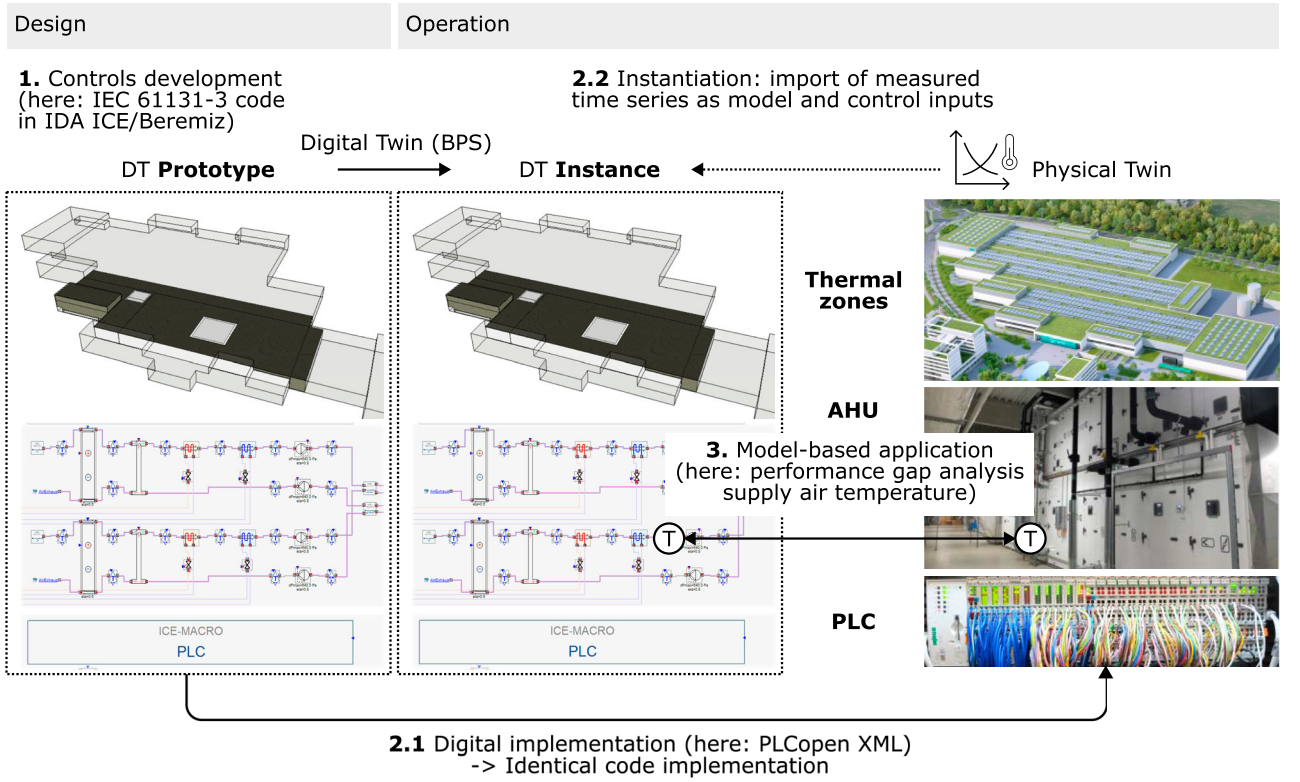

Figure 10. Workflow for the specification of control sequences using a Digital Twin Prototype and the performance gap analysis using a Digital Twin Instance in the case study building.

within the IDA ICE environment. In the Beremiz editor, a rule-based control program was developed in Structured Text according to IEC 61131-3 (see '1' top left in Figure 10) using function blocks from the open-source library OSCAT BASIC (Mühlbauer 2015). Similarly to the initially implemented control sequence (see Section 3.2.3), the extract air temperature is the controlled variable in a cascade control.

The modelling of the AHUs (left in Figure 10) is done using component blocks from the IDA ICE library. The behaviour of components is simplified, for example in an idealized valve component which uses a linear relation between the mass flow and the valve position and neglects the pressure dependency and typical characteristic curves. Several effects, such as 2-D or 3-D effects within ducts, inertia through water and air masses, pressure drops due to pipe and duct friction, heat losses through pipes and ducts, the response time and inertia of valves, flaps, and all Information and Communications Technology (ICT) components, and measurement uncertainties and measurement noise are neglected.

3.3.2. Execution phase

Digital transfer of control sequences. The IEC 61131-10 XML created by Beremiz was imported in the commercial PLC IDE e!cockpit ('1' in Table 2 and '2.1' in Figure 10). As the control program only contained energy and comfort relevant parts, system functions for instance for frost protection and fan control were added.

Instantiation. Within the instantiation, measured time series of the fresh air and extract air conditions (temperature, humidity, flow rate) were manually imported into the Digital Twin Instance and imposed on the AHU model and the controller inputs in order to enable a performance gap analysis (see '2.2' in Figure 10). For online applications in real-time, measured values could be imposed on the models, for example using the OPC UA interface of IDA ICE (Sahlin, Skogqvist, and Högberg 2018).

3.3.3. Performance gap analysis in operation

In operation, the Digital Twin Instance, including control sequences and HVAC models, is used as a reference for model-based applications identified in Section 1.2 (see '3' in Figure 10). The performance gap analysis focuses on the performance of the AHUs, however, a further comparison of thermal zones would be possible but is not in the focus of this study.

The principle of the performance gap analysis is depicted in a functional diagram in Figure 11. The measured extract air temperature $t_{extract,measure}$ and the measured (recorded) extract air temperature setpoint

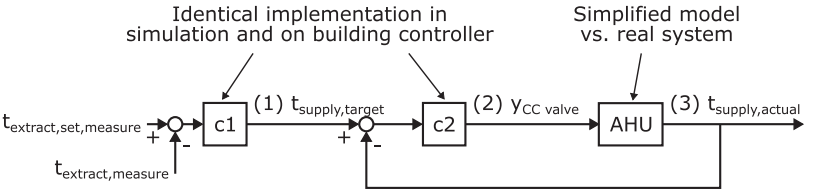

Figure 11. Input values $t_{extract,set,measure}$ and $t_{extract,measure}$ and performance indicators (1) $t_{supply,target}$, (2) $y_{cc,valve}$, and (3) $t_{supply,actual}$ in a control loop for the performance gap analysis in the case study.

$t_{extract,set,measure}$ are prescribed on the simulation controller. Due the use of a digital exchange format, control sequences are identically implemented in the control blocks `c1` and `c2` for the extract air temperature control sequence both in simulation and on the PLC. Contrary, the AHUs are represented as simplified models compared to the real system (see also Figure 1). The performance gap analysis carried out for three indicators[7]: (1) The target supply air temperature $t_{supply,target}$ as an output of the control block `c1`, (2) the control signal $y_{cc,valve}$ of the cooling coil valve as an output of the control block `c2`, and (3) the actual supply air temperature $t_{supply,actual}$. For these indicators, the measured and simulated time series are compared for a summer period from June 26 until June 30, 2023.

The results of the performance gap analysis are presented in Figure 12 as time series of measured and simulated performance indicators and the resulting RMSE (Root Mean Square Error).[8] Figure 12(a) shows that as a result of the identical implementation of control sequences in the simulation and on the building controller the measured and simulated target supply air temperatures match. The fact that they are not mathematically identical (a RMSE of $\pm 0.05K$ remains) is due to the execution of the control code by a solver in a BPS environment and the Runtime Environment (RTE) on the PLC. The time series of the control signal of the cooling coil in Figure 12(b) reveals two main differences: first, due to the simplified valve model with a linear characteristic (see Section 3.3.1), the measured control signals are in general higher than the measured control signals. Second, the measured control signal shows unstable behaviour at very small values which is rooted in the complex valve behaviour at very small openings in interaction with on-off behaviour of an upstream feeder pump (not depicted here) outside of the modelling scope.[9] This results in oscillations of the actual supply air temperature (see Figure 12(c)). The resulting RMSE of the actual supply air temperature taking into account modelling simplifications (see Section 3.3.1) is ± 0.31 K. In the context of performance gap analyses, the confidence interval of measurements of physical variables must be taken into account in particular.

4. Results and discussion

The analysis in the case study building shows that the replication of control sequences in white-box models using BPS environments based on design documentation, existing simulation models, control code, or reverse engineering methods is work-intensive, error-prone, and inefficient. The analysis also outlines the mismatch between as-designed and as-built control sequences as a consequence of using analog textual and graphical control descriptions as exchange format between design and execution. Such replications are always only an approximation of either the intended or implemented control sequences. The achievable match between intended or implemented control sequences and model representations depends on the complexity of the system, available information, and time and effort put in the replication but a control-related performance gap inevitably remains.

In building industry practice today, only manufacturers of building automation systems might be able to integrate control sequences in Digital Twins because they have direct access to the control code. However, today, building automation system manufacturers usually only enter construction projects (in new or existing buildings) at the execution phase and are not yet involved in the design phase and can hence not perform integrated prototyping of HVAC systems and controls as a key Digital Twin application. A further challenge for these companies is that they have to integrate detailed building models for fully functional Digital Twins.

The case study analysis underlines that using Digital Twins for the specification of controls together with digital exchange formats is the key to close the control-related performance gap and overcomes the limitations and issues of the replication of control sequences. The digital transfer of controls from the Digital Twin Prototype ensures that controls are identically implemented in the Digital Twin Instance and on building controllers.

Another major advantage is that the existing control sequences and the HVAC and building models from the Digital Twin Prototype can be further used as a Digital Twin Instance for model-based applications in operation (see Figure 2). This continued use of existing models

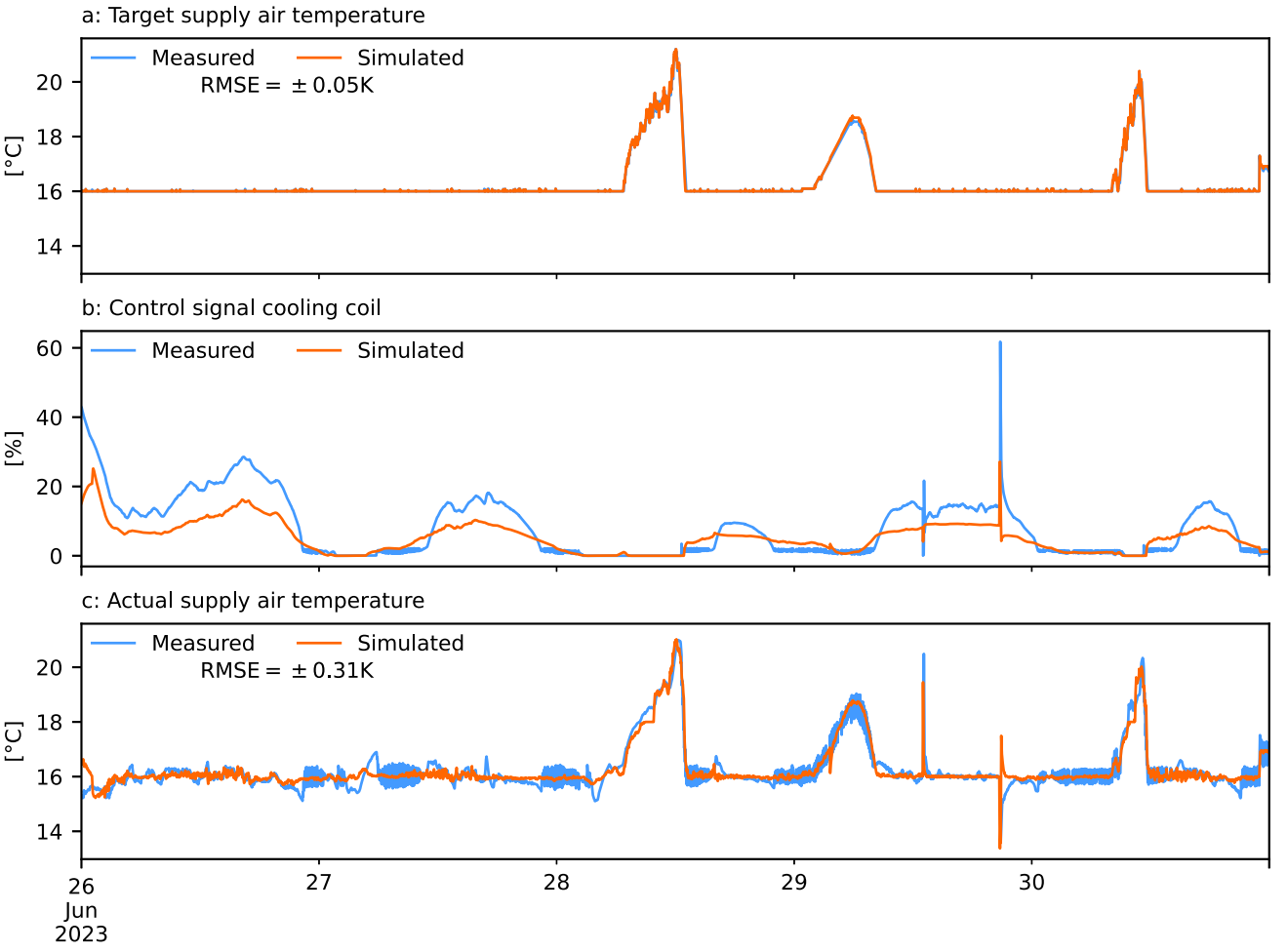

Figure 12. Performance gap analysis for the AHU in the case study.

maximizes the benefit and the efficiency within the Digital Twin framework across the building life cycle. Replicating control sequences documented from the design phase or implemented on controllers is no longer needed and the existing problem of controls as black-boxes in operation can be solved.

Reasons for the remaining *dynamic performance gap* in operation are simplifications in the modelling of HVAC system components and the confidence interval of measurements in practice. However, once the control-related performance gap is closed, performance gap analyses can focus on physical components or user behaviour. In the case study, more detailed models, for example for the cooling coil valve, could be used to further close the system-related performance gap.

The model-based development of control sequences in a Digital Twin Prototype in the design phase, their instantiation and their digital transfer from the Digital Twin Prototype in the building automation system (BAS) during the execution phase, as well as model-based applications in operation correspond to the Digital Twin concept described by Grieves and Vickers (2017) (see Section 1.1). Moreover, such an integrated application of Digital Twins in a design-build-operate workflow over the life cycle addresses the call to action by Wetter and Sulzer (2023) concerning the use of BPS tools in building industry practice.

Against the background of the issues related to the replication of control sequences in white-box models, a data-driven approach would be an alternative option to imitate the AHU controller behaviour based on a set of inputs and outputs. However, a data-based controller model would have very limited abilities to reflect parameter variations in what-if scenarios which is a strength of detailed white-box models. The AHU and the thermal zones could have been modelled using a data-based approach, too. However, in the case study such data-based AHU and building models might have limited validity for the design of new control sequences because the AHUs and the connected zones are operated in significantly different operation modes (re-circulation air and drastically reduced air flows) which might not be covered in a data-based model. In general, data-driven building and system models appear to remain an alternative

in existing buildings when the building envelope and HVAC systems are not modified, when proprietary subsystem controls are present which can not be easily replicated, and for specific applications such as forecasts and building-level MPC. However, in such cases the advantages of an integrated application of the Digital Twin framework from design to operation and the advantages of multi-purpose physics-based white-box models can not be leveraged.

In practical applications, complementary semantic modelling is required, firstly, to support the transfer of control logic from the design stage to the execution stage, and secondly, to enable interoperability between different Digital Twin applications in operation (see Figure 2). For PLCs, the integration of the IEC 61131-10 XML as digital exchange formats for control sequences and and a semantic model is described by Ihlenburg et al. (2024).

The analysis illustrates the required effort and barriers for the replication of control sequences in BPS environments which should then be used for model-based applications. However, there has already been an effort for the development of these controls in the first place (see 'Standard industry process' in Figure 3). Using Digital Twins already for the specification of controls avoids these double works. Together with the possibility to integrate HVAC engineering and control engineering, this illustrates the potential to use synergies and increase the overall process efficiency over multiple life cycle stages. The continued use of the Digital Twin Prototype for model-based applications in operation also reduces the overall effort compared to the individual application-specific creation of models. However, the model requirements for operational applications have to be carefully considered when creating design models (Digital Twin Prototypes) in order to limit the complexity and ensure that simulation models remain manageable.

5. Conclusion and outlook

The results and finding of the application of the comparative framework for the role of controls in Digital Twins illustrate that:

(1) Control-related Digital Twin applications using physics-based models which are initiated only during the operation phase and which require replicating control sequences are not efficient and in total not expedient. The case study application underlines that the current normative processes and the lack of digitally available exchange formats for control sequences are a barrier for the application of the Digital Twin concept and inevitable result in a control-related performance gap.

(2) The digital transfer of control sequences developed and tested in BPS environments during the design phase (Digital Twin Prototype) on a building controller closes the control-related performance gap by ensuring identical control implementations in the model and the real building and is thus the key for the consistent, efficient, and integrated application of Digital Twins over the building life cycle. This approach was successfully demonstrated in a practical implementation for AHUs using the IEC 61131-10 XML.

To take such an integrated approach forward, the following challenges need to be addressed: First and foremost, the toolchains to digitally transfer controls from BPS software on building controllers (see Table 2) need to be further developed for productive use. Furthermore, the exchange of proprietary controls, for example for heat pumps, as well as of building and HVAC component models in a standardized exchange format and integrated in BIM procedures needs to be stimulated by cross-domain collaboration. For a fully integrated application of multiple Digital Twin applications, holistic software environments, so-called Digital Twin Environments (Grieves and Vickers 2017; Red Hat 2023), including not only simulation engines but also features to manage and visualize measured and simulated data, have to be developed. While today's BPS environments typically focus on supporting the design phase (offline application), such Digital Twin Environments also need to provide features to switch simulation engines between offline applications, such as prototyping or what-if analyses, and online applications using measured live data.

Notes

1. Analyses of measured time series (monitoring) without a reference model can not be considered a Digital Twin application because it is not a model-based application. Operational optimization is usually counted among Digital Twin applications (Cespedes-Cubides and Jradi 2024). In the context of controls, two cases can be distinguished: first, when parameter variations are made as part of the optimization, it can be referred to as 'what-if analysis' according to the presented scheme. Second, if the optimization includes the revision of control sequences, this corresponds to 'prototyping' as a design application (although the building is in operation).
2. Of course, there are many other studies with comparable applications that do not use the keyword 'Digital Twin'.
3. It is therefore classified under 'design only'.
4. Note that BPS models are typically not directly usable for MPC (Drgoňa et al. 2020).
5. In today's building automation systems, controls are already commonly implemented in different locations, such as central building controllers, intelligent field devices, or

management applications. This trend of distributed control logic is expected to continue in the context of intelligent IoT (Internet of Things) devices. For the sake of simplification, a central controller on which the control logic developed in BPS environments is implemented is assumed within this study.

6. The findings are an abridged version of a previous study which included two more demonstration buildings (Walther, Molinari, Voss 2023).
7. For the cooling energy as another suitable performance indicator no measured time series were available.
8. The RMSE is not calculated for the control signal of the cooling coil because it includes periods where either the measured or the simulated time series are around 0 which biases the result.
9. This feeder pump is not included in this models as it also supplies three other AHUs and the extension of the modelling would have significantly increased the modelling effort.

Acknowledgments

The authors would like to thank Equa Simulation AB for their support in using novel developments to simulate PLC code according to IEC 61131-3 in IDA ICE.

Disclosure statement

No potential conflict of interest was reported by the author(s).

Funding

We gratefully acknowledge the financial support provided by the German Federal Ministry for Economic Affairs and Climate Action (BMWK), promotional reference 03ET1446B. This research was funded by the Swedish Energy Agency and IQ Samhällsbyggnad, under the Resurseffektiv bebyggelse programme (project DOCENT – Development of Occupant-centric Control for ENergy efficienT buildings, project number P2023-01513), and by Digital Futures (Project HiSSx–Humanizing the Sustainable Smart City eXtended), grant agreement KTH-RPROJ-0146472.

Data availability statement

The data on which the study is based can be requested from the authors and made available upon justified interest.

References

Agouzoul, Abdelali, Emmanuel Simeu, and Mohamed Tabaa. 2023. "Enhancement of Building Energy Consumption Using a Digital Twin Based Neural Network Model Predictive Control." In *2023 International Conference on Control, Automation and Diagnosis (ICCAD)*, 1–6. Rome, Italy: IEEE. May 10–12, 2023. isbn: 979-8-3503-4707-4. https://doi.org/10.1109/ICCAD57653.2023.10152308.

Berger, Michael, Filippo Bernardello, Craig Barry, Pravesh Badjoonauth, Shruthi Balaji, and Michael Lakhdar. 2022. "Real-Time Model Predictive Control with Digital Twins and Edge Computing Technologies". May 22–25, 2022. https://doi.org/10.34641/CLIMA.2022.368.

Bjørnskov, Jakob, and Muhyiddine Jradi. 2023. "An Ontology-Based Innovative Energy Modeling Framework for Scalable and Adaptable Building Digital Twins." *Energy and Buildings* 292:113146. issn: 03787788. https://doi.org/10.1016/j.enbuild.2023.113146.

Boje, Calin, Annie Guerriero, Sylvain Kubicki, and Yacine Rezgui. 2020. "Towards a Semantic Construction Digital Twin: Directions for Future Research." *Automation in Construction* 114:103179. issn: 09265805. https://doi.org/10.1016/j.autcon.2020.103179.

Buckley, Niall, Gerald Mills, Samuel Letellier-Duchesne, and Khadija Benis. 2021. "Designing An Energy-Resilient Neighbourhood Using An Urban Building Energy Model." *Energies* 14 (15): 4445. issn: 1996-1073. https://doi.org/10.3390/en14154445.

Cai, Hanmin, Fazel Khayatian, and Philipp Heer. 2021. "Experiment Strategy for Evaluating Advanced Building Energy Management System." *Journal of Physics: Conference Series* 2042 (1): 012030. issn: 1742-6588. https://doi.org/10.1088/1742-6596/2042/1/012030.

Cañas, Héctor, Josefa Mula, Manuel Díaz-Madroñero, and Francisco Campuzano-Bolarín. 2021. "Implementing Industry 4.0 Principles." *Computers & Industrial Engineering* 158: 107379. issn: 03608352. https://doi.org/10.1016/j.cie.2021.107379.

Cespedes-Cubides, Andres Sebastian, and Muhyiddine Jradi. 2024. "A Review of Building Digital Twins to Improve Energy Efficiency in the Building Operational Stage." *Energy Informatics* 7 (1): 11. https://doi.org/10.1186/s42162-024-00313-7.

Clausen, Anders, Krzysztof Arendt, Aslak Johansen, Fisayo Caleb Sangogboye, Mikkel Baun Kjærgaard, Christian T. Veje, and Bo Nørregaard Jørgensen. 2021. "A Digital Twin Framework for Improving Energy Efficiency and Occupant Comfort in Public and Commercial Buildings." *Energy Informatics* 4 (S2): 40. https://doi.org/10.1186/s42162-021-00153-9.

Davila Delgado, Juan Manuel, and Lukumon Oyedele. 2021. "Digital Twins for the Built Environment: Learning from Conceptual and Process Models in Manufacturing." *Advanced Engineering Informatics*49:101332. issn: 14740346. https://doi.org/10.1016/j.aei.2021.101332.

Drgoňa, Ján, Javier Arroyo, Iago Cupeiro Figueroa, David Blum, Krzysztof Arendt, Donghun Kim, Enric Perarnau Ollé. 2020. "All You Need to Know about Model Predictive Control for Buildings." *Annual Reviews in Control* 50:190. 232. issn: 13675788. https://doi.org/10.1016/j.arcontrol.2020.09.001.

Grieves, Michael. 2014. "Digital Twin: Manufacturing Excellence Through Virtual Factory Replication." https://www.researchgate.net/publication/275211047_Digital_Twin_Manufacturing_Excellence_through_Virtual_Factory_Replication.

Grieves, Michael, and John Vickers. 2017. "Digital Twin: Mitigating Unpredictable, Undesirable Emergent Behavior in Complex Systems." In *Transdisciplinary Perspectives on Complex Systems: New Findings and Approaches*, edited by Anabela Alves, Shannon Flumerfelt, and Franz-Josef Kahlen, 1st ed. Switzerland: Springer International Publishing.

Hensen, Jan, and Roberto Lamberts, eds. 2019. *Building Performance Simulation for Design and Operation*. Expanded 2nd ed. London, New York: Routledge. isbn: 978-0-429-40229-6 . http://site.ebrary.com/lib/alltitles/Doc?id = 10603161.

Hosamo, Haidar Hosamo, Paul Ragnar Svennevig, Kjeld Svidt, Daguang Han, and Henrik Kofoed Nielsen. 2022. "A Digital Twin Predictive Maintenance Framework of Air Handling

Units Based on Automatic Fault Detection and Diagnostics." *Energy and Buildings* 261:111988. issn: 03787788. https://doi.org/10.1016/j.enbuild.2022.111988.

Ihlenburg, Moritz, Nicolas Réhault, Sebastian Herkel, and Gesa Benndorf. 2024. "Towards a Digital Representation of Building Systems Controls." In *International Sustainable Energy Conference - Proceedings 1*, April 10–11, 2024. Graz, Austria: AEE - Institut für Nachhaltige Technologien (AEE INTEC). https://doi.org/10.52825/isec.v1i.1217.

Javaid, Mohd, Abid Haleem, and Rajiv Suman. 2023. "Digital Twin Applications toward Industry 4.0: A Review." *Cognitive Robotics* 3:71–92. issn: 26672413. https://doi.org/10.1016/j.cogr.2023.04.003.

Jones, David, Chris Snider, Aydin Nassehi, Jason Yon, and Ben Hicks. 2020. "Characterising the Digital Twin: A Systematic Literature Review." *CIRP Journal of Manufacturing Science and Technology*29:36–52. issn: 17555817. https://doi.org/10.1016/j.cirpj.2020.02.002.

Khajavi, Siavash H., Naser Hossein Motlagh, Alireza Jaribion, Liss C. Werner, and Jan Holmstrom. 2019. "Digital Twin: Vision, Benefits, Boundaries, and Creation for Buildings." *IEEE Access*7:147406–147419. https://doi.org/10.1109/ACCESS.2019.2946515.

Kritzinger, Werner, Matthias Karner, Georg Traar, Jan Henjes, and Wilfried Sihn. 2018. "Digital Twin in Manufacturing: A Categorical Literature Review and Classification." *IFAC-PapersOnLine* 51 (11): 1016–1022. issn: 24058963. https://doi.org/10.1016/j.ifacol.2018.08.474.

Lee, Edward A., and Marjan Sirjani. 2018. "What Good Are Models?" In *Formal Aspects of Component Software: 15th International Conference, FACS 2018, Pohang, South Korea, October 10-12, 2018, Proceedings, 1st ed. 2018, by Kyungmin Bae*, edited by Kyungmin Bae, Peter Csaba Ölveczky, Kyungmin Bae, and Peter Csaba Ölveczky, 3-31, Vol. 11222. Programming and Software Engineering. Cham: Springer International Publishing; Imprint: Springer. https://doi.org/10.1007/978-3-030-02146-7_1.

Lenord, Oliver, Martin Otter, Christoff Bürger, Michael Hussmann, Pierre Le Bihan, Jörg Niere, Andreas Pfeiffer, Robert Reicherdt, and Kai Werther. 2021. "eFMI: An Open Standard for Physical Models in Embedded Software." In *Proceedings of 14th Modelica Conference 2021: September 20–24, 2021, Linköping, Sweden : Proceedings*, edited by Martin Sjölund, Lena Buffoni, Adrian Pop, and Lennart Ochel, 57-71. Vol. No. 181. Linköping Electronic Conference Proceedings. Linköping: Modelica Association; Linköping University Electronic Press. https://doi.org/10.3384/ecp2118157.

Li, Jie, Lisa Domenica Iulo, and Ute Poerschke. 2023. "A Review of the Energy Performance Gap between Predicted and Actual Use in Buildings." In *2023 Building Simulation Conference*. September 4, 2023. Accessed November 16, 2024. https://doi.org/10.26868/25222708.2023.1430.

Lu, Qiuchen, Xiang Xie, Ajith Kumar Parlikad, and Jennifer Mary Schooling. 2020. "Digital Twin-Enabled Anomaly Detection for Built Asset Monitoring in Operation and Maintenance." *Automation in Construction* 118:103277. issn: 09265805. https://doi.org/10.1016/j.autcon.2020.103277.

Lydon, G. P., S. Caranovic, I. Hischier, and A. Schlueter. 2019. "Coupled Simulation of Thermally Active Building Systems to Support a Digital Twin." *Energy and Buildings* 202:109298. issn: 03787788. https://doi.org/10.1016/j.enbuild.2019.07.015.

Maier, Laura, David Jansen, Fabian Wüllhorst, Martin Kremer, Alexander Kümpel, Tobias Blacha, and Dirk Müller. 2023. "AixLib: An Open-Source Modelica Library for Compound Building Energy Systems from Component to District Level with Automated Quality Management." *Journal of Building Performance Simulation* 17 (2): 196–219. https://doi.org/10.1080/19401493.2023.2250521.

Marchione, Piergiorgio, and Francesco Ruperto. 2022. "Prototyping a Digital Twin – a Case Study of a 'U-Shaped' Military Building." *International Journal of Energy Production and Management* 5 (4): 83–94. issn: 2056-3272. https://doi.org/10.2495/EQ-V7-N1-83-94.

Mühlbauer, Tobias. 2015. OSCAT: Basic:Library. http://www.oscat.de/component/jdownloads/send/2-oscat-basic/9-oscat-basic333-en.html?Itemid = 0.

Nytsch-Geusen, Christoph, Werner Kaul, Jörg Rädler, and Lucas Westermann. 2019. "The Digital Twin as a Base for the Design of Building Control Strategies." In *Proceedings of Building Simulation 2019: 16th Conference of IBPSA*, edited by Vincenzo Corrado, Enrico Fabrizio, Andrea Gasparella, and Francesco Patuzzi. Building Simulation Conference Proceedings. September 2–4, 2019. Rome, Italy: IBPSA. https://doi.org/10.26868/25222708.2019.210389.

Peng, Yang, Ming Zhang, Fangqiang Yu, Jinglin Xu, and Shang Gao. 2020. "Digital Twin Hospital Buildings: An Exemplary Case Study through Continuous Lifecycle Integration." *Advances in Civil Engineering* 2020:1–13. issn: 1687-8086. https://doi.org/10.1155/2020/8846667.

Perno, Matteo, Lars Hvam, and Anders Haug. 2022. "Implementation of Digital Twins in the Process Industry: A Systematic Literature Review of Enablers and Barriers." *Computers in Industry* 134:103558. issn: 01663615. https://doi.org/10.1016/j.compind.2021.103558.

Plesser, Stefan. 2018. "Quality Management for Building Performance: Closing the Gap between Design and Operation." https://www.quantum-project.eu/fileadmin/News_Images/1-2_Plesser_QUANTUM_FutureBuild_190305.pdf.

Rasheed, Adil, Omer San, and Trond Kvamsdal. 2020. "Digital Twin: Values, Challenges and Enablers from a Modeling Perspective." *IEEE Access* 8:21980–22012. https://doi.org/10.1109/ACCESS.2020.2970143.

Red Hat. 2023. "Understanding Digital Twin Environments: An Overview of Architecture and Solution Implementation." Accessed August 23, 2023. https://www.redhat.com/rhdc/managed-files/co-understanding-digital-twin-environments-detail-f30893-202201-en_0.pdf.

Roy, Rohan Basu, Debasish Mishra, Surjya K. Pal, Tapas Chakravarty, Satanik Panda, M. Girish Chandra, Arpan Pal, Prateep Misra, Debashish Chakravarty, and Sudip Misra. 2020. "Digital Twin: Current Scenario and a Case Study on a Manufacturing Process." *The International Journal of Advanced Manufacturing Technology* 107 (9–10): 3691–3714. issn: 0268-3768. https://doi.org/10.1007/s00170-020-05306-w.

Ruepp, Daniel, Simon Ollander, Per Sahlin, Markus Hogberg, Sven Moosberger, and Dagmar Jähnig. 2022. "On the Track of Optimized Building Operation." In *ISEC: 2nd Internations Sustainable Energy Conference 2022*, edited by Werner Weiss. Graz, Austria: AEE - Institut für Nachhaltige Technologien (AEE INTEC).

Sacks, Rafael, Ioannis Brilakis, Ergo Pikas, Haiyan Sally Xie, and Mark Girolami. 2020. "Construction with Digital Twin

Information Systems." *Data-Centric Engineering* 1: e14. https://doi.org/10.1017/dce.2020.16.

Sahlin, Per, Axel Bring, and Lars Eriksson. 2009. "Real Controllers in the Context of Full-Building, Whole-Year Simulation." In *Eleventh International IBPSA Conference*. Glasgow, Scotland: IBPSA. https://publications.ibpsa.org/conference/paper/?id = bs2009_0072_79.

Sahlin, Per, Patrik Skogqvist, and Markus Högberg. 2018. "IEC 61131-3 Code Simulation for Software-In-the-Loop PLC Testing with EQUA Tools." https://itea3.org/project/workpackage/document/download/5090/D3.5%20OPENCPS%20-%20IEC61131-3%20Code%20Simulation%20For%20SiL%20PLC%20Testing%20M36.pdf.

Semeraro, Concetta, Mario Lezoche, Hervé Panetto, and Michele Dassisti. 2021. "Digital Twin Paradigm: A Systematic Literature Review." *Computers in Industry* 130:103469. issn: 01663615. https://doi.org/10.1016/j.compind.2021.103469.

Simonsson, Johan, Khalid Tourkey Atta, Gerald Schweiger, and andWolfgang Birk. 2021. "Experiences from City-Scale Simulation of Thermal Grids." *Resources* 10 (2): 10. https://doi.org/10.3390/resources10020010.

Singh, Maulshree, Evert Fuenmayor, Eoin Hinchy, Yuansong Qiao, Niall Murray, and Declan Devine. 2021. "Digital Twin: Origin to Future." *Applied System Innovation* 4 (2): 36. https://doi.org/10.3390/asi4020036.

Spudys, Paulius, Nicholas Afxentiou, Phoebe-Zoe Georgali, Egle Klumbyte, Andrius Jurelionis, and Paris Fokaides. 2023. "Classifying the Operational Energy Performance of Buildings with the Use of Digital Twins." *Energy and Buildings* 290:113106. issn: 03787788. https://doi.org/10.1016/j.enbuild.2023.113106.

Sulzer, Matthias, Michael Wetter, Robin Mutschler, and Alberto Sangiovanni-Vincentelli. 2023. "Platform-Based Design for Energy Systems." *Applied Energy* 352:121955. issn: 03062619. https://doi.org/10.1016/j.apenergy.2023.121955.

Tao, Fei, He Zhang, Ang Liu, and A. Y. C. Nee. 2019. "Digital Twin in Industry: State-Of-The-Art." *IEEE Transactions on Industrial Informatics* 15 (4): 2405–2415. issn: 1551-3203. https://doi.org/10.1109/TII.2018.2873186.

Tariq, Rasikh, C. E. Torres-Aguilar, J. Xamán, I. Zavala-Guillén, A. Bassam, Luis J. Ricalde, and O. Carvente. 2022. "Digital Twin Models for Optimization and Global Projection of Building-Integrated Solar Chimney." *Building and Environment* 213:108807. issn: 03601323. https://doi.org/10.1016/j.buildenv.2022.108807.

VanDerHorn, Eric, and Sankaran Mahadevan. 2021. "Digital Twin: Generalization, Characterization and Implementation." *Decision Support Systems* 145:113524. issn: 01679236. https://doi.org/10.1016/j.dss.2021.113524.

Van Dronkelaar, Chris, Mark Dowson, Catalina Spataru, and Dejan Mumovic. 2016. "A Review of the Regulatory Energy Performance Gap and Its Underlying Causes in Non-Domestic Buildings." *Frontiers in Mechanical Engineering* 1: 17. https://doi.org/10.3389/fmech.2015.00017.

Viola, Jairo, and YangQuan Chen. 2020. "Digital Twin Enabled Smart Control Engineering as an Industrial AI: A New Framework and Case Study." In *The 2nd International Conference on Industrial Artificial Intelligence (IAI 2020): October, 23–25, 2020*, Shenyang, China, 1–6. Piscataway, NJ: IEEE. isbn: 978-1-72818-216-2. https://doi.org/10.1109/IAI50351.2020.9262203.

Visier, Jean Christophe, and Richard Buswell. 2010. Commissioning Tools for Improved Building Energy Performance: ECBCS Annex 40 Project Summary Report. https://www.iea-ebc.org/Data/publications/EBC_Annex_40_PSR.pdf.

WAGO GmbH & Co. KG. 2022. Libraries for Building Automation: Function Block Descriptions for HVAC Functions.

Walther, Karl, Marco Molinari, and Karsten Voss. 2023. The Role of HVAC Controls in Building Digital Twins: Lessons Learned from Demonstration Buildings with an Application to Air Handling Units." In *Proceedings of Building Simulation 2023: 18th Conference of IBPSA*, 3419–3426. Shanghai, China, September 4–6, 2023. IBPSA. https://doi.org/10.26868/25222708.2023.1434.

Ward, Rebecca, Ruchi Choudary, Melanie Jans Singh, Flora Roumpani, Tomas Lazauskas, May Yong, Nicholas Barlow, and Markus Hauru. 2023. "The Challenges of Using Live-Streamed Data in a Predictive Digital Twin." *Journal of Building Performance Simulation* 16 (5): 609–630. https://doi.org/10.1080/19401493.2023.2187463.

Wetter, Michael. 2009. "Modelica-Based Modelling and Simulation to Support Research and Development in Building Energy and Control Systems." *Journal of Building Performance Simulation* 2 (2): 143–161. issn: 1940-1493. https://doi.org/10.1080/19401490902818259.

Wetter, Michael, Paul Ehrlich, Antoine Gautier, Milica Grahovac, Philip Haves, Jianjun Hu, Anand Prakash, Dave Robin, and Kun Zhang. 2022. "OpenBuildingControl: Digitizing the Control Delivery from Building Energy Modeling to Specification, Implementation and Formal Verification." *Energy* 238:121501. issn: 03605442. https://doi.org/10.1016/j.energy.2021.121501.

Wetter, Michael, Milica Grahovac, and Jianjun Hu. 2018. "Control Description Language." In *Proceedings of the 1st American Modelica Conference*. Cambridge, MA: Modelica Association and Linköping University Electronic Press.

Wetter, Michael, Jianjun Hu, Anand Prakash, Paul Ehrlich, Gabe Fierro, Milica Grahovac, Marco Pritoni, Lisa Rivalin, and Dave Robin. 2021. "Modelica-Json: Transforming Energy Models to Digitize the Control Delivery Process." In *Proceedings of Building Simulation 2021a: 17th Conference of IBPSA. Building Simulation Conference Proceedings*. Bruges, Belgium: IBPSA. https://doi.org/10.26868/25222708.2021.30141.

Wetter, Michael, and Matthias Sulzer. 2023. "A Call to Action for Building Energy System Modelling in the Age of Decarbonization." *Journal of Building Performance Simulation* 17 (3): 383–393. https://doi.org/10.1080/19401493.2023.2285824.

Wetter, Michael, Wangda Zuo, Thierry S. Nouidui, and Xiufeng Pang. 2014. "Modelica Buildings Library." *Journal of Building Performance Simulation* 7 (4): 253–270. issn: 1940-1493. https://doi.org/10.1080/19401493.2013.765506.

Wilde, Pieter. 2014. "The Gap Between Predicted and Measured Energy Performance of Buildings: A Framework for Investigation." *Automation in Construction* 41:40–49. issn: 09265805. https://doi.org/10.1016/j.autcon.2014.02.009.

Wilde, Pieter. 2023. "Building Performance Simulation in the Brave New World of Artificial Intelligence and Digital Twins: A Systematic Review." *Energy and Buildings* 292: 113171. https://doi.org/10.1016/j.enbuild.2023.113171.

Wright, Louise, and Stuart Davidson. 2020. "How to Tell the Difference between a Model and a Digital Twin."

Advanced Modeling and Simulation in Engineering Sciences 7 (1): 13. https://doi.org/10.1186/s40323-020-00147-4.

Xie, Xiang, Jorge Merino, Nicola Moretti, Pieter Pauwels, Janet Yoon Chang, and Ajith Parlikad. 2023. "Digital Twin Enabled Fault Detection and Diagnosis Process for Building HVAC Systems." *Automation in Construction* 146:104695. issn: 09265805. https://doi.org/10.1016/j.autcon.2022.104695.

Zhou, Jiehan, Shouhua Zhang, and Mu Gu. 2022. "Revisiting Digital Twins: Origins, Fundamentals, and Practices." *Frontiers of Engineering Management* 9 (4): 668–676. issn: 2095-7513. https://doi.org/10.1007/s42524-022-0216-2.

Standards

International Electrotechnical Commission. 2019. *Programmable Controllers. Part 10: PLC Open XML Exchange Format*. IEC 61131-10. January.

International Organization for Standardization. 2005. *Building Automation and Control Systems (BACS) – Part 3: Functions*. ISO 16484-3. December.

Verein Deutscher Ingenieure. 2022. *Building Automation and Control Systems (BACS). Methods and Tools for Planning, Building, and Acceptance Tests. BACS Automation Scheme, BACS Function List, BACS Function Description*. VDI 3814- 4.3. July.

Software

Beremiz SAS. 2024. *Beremiz*. https://beremiz.org/.

Environmental Design Solutions Ltd. 2024. *TAS*. https://www.edsltas.net/.

EQUA Simulation AB. 2024. *IDA ICE*. https://www.equa.se/de/ida-ice.

openHAB Foundation e.v. 2024. *openHAB*. https://www.openhab.org/.

WAGO GmbH & Co. KG. 2024. *E!Cockpit*. https://www.wago.com/global/automationtechnology/discover-software/ecockpit-engineering-software.